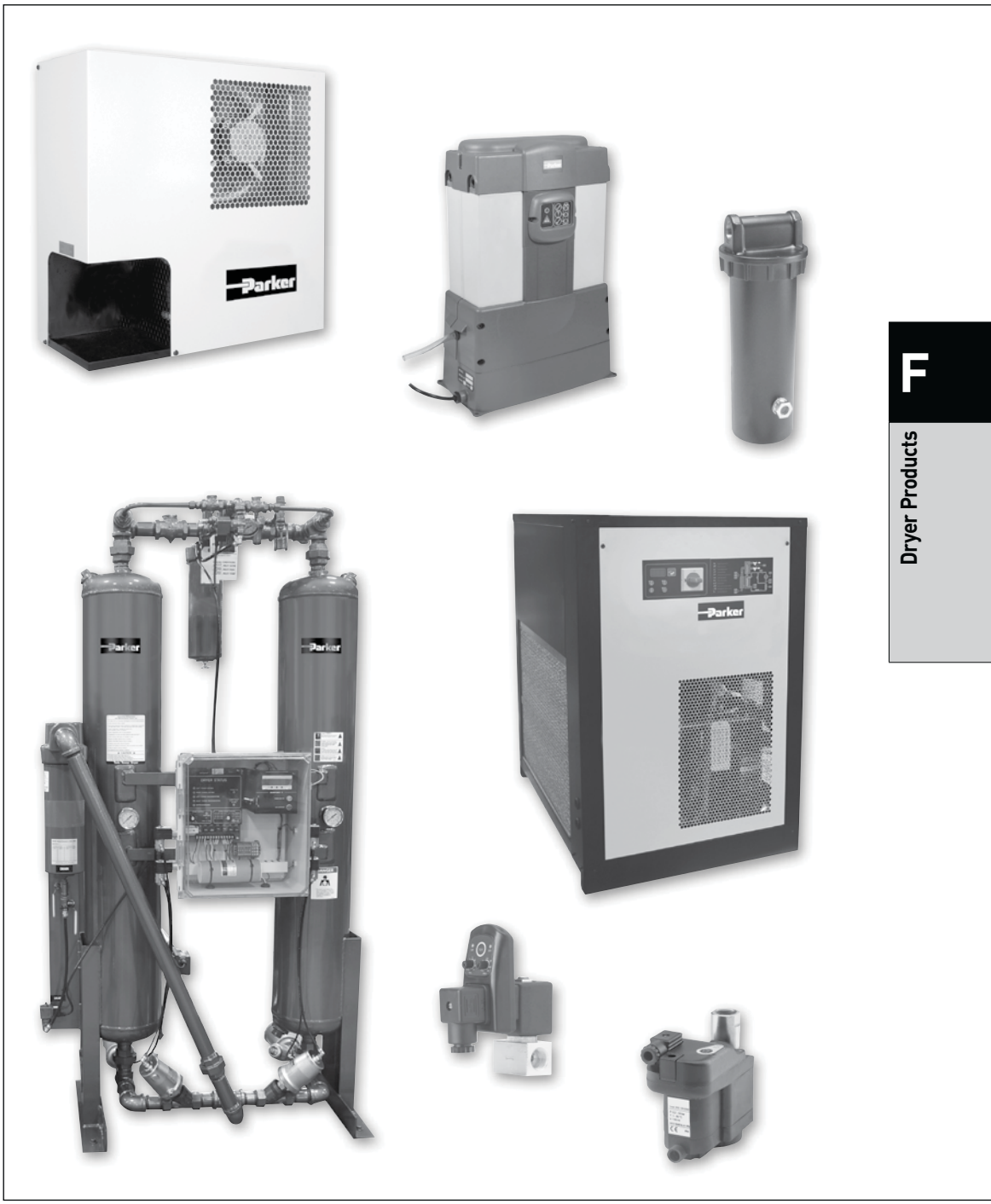

Dryers

Parker Hannifin Corporation
Pneumatic Division
Richland, Michigan
www.parker.com/pneumatics

Dryers

Dryer Products

F3

- **Refrigeration (10-2400 SCFM)**
- **Inline desiccant (15-60 SCFM)**
- **Regenerative desiccant (3-800 SCFM)**
- **Heatless desiccant dryers**
- **Zero loss & timer drains**
- **Auto electrical drain valves**

Parker Hannifin Corporation
Pneumatic Division
Richland, Michigan
www.parker.com/pneumatics

PRD Refrigeration Dryer Series

PRD10 - PRD250

- "Plug & Play" design for easy installation and operation (PRD10 - PRD125)
- Small space saving design
- Oversized demister separator resulting in excellent liquid removal over all operating conditions
- Low pressure differential across the dryer (1.45 PSIG average)
- Oversized condenser to operate in ambients to 122°F (50°C)
- All models incorporate a dewpoint indicator

PRD325 - PRD2400

- Optimum dewpoint levels for highest system performance
- Advanced patented design solutions
- High reliability, easy to use and maintain
- Unique 4-in-1 SmartPack heat exchanger
- Integral drain
- Extremely low pressure drop design
- SmartControl energy saving function
- Excellent dewpoint performances
- Advanced compliant scroll compressor

PRD Series

Capacity CFM @ 100 PSIG (m^3/min @ 6.9 bar)	Primary voltage	Part number	Pipe size	Recommended filtration: Bulk separator	Pre-filter (5µ particulate)*	Post-filter (.01µ coalescing)
10 (17)	115V/1ph/60Hz	**PRD10-115160**	1/2" NPT-F	**P3TFA94WCAN**	**P32FA94ESAN**	**P32FA94DSAN**
15 (26)	115V/1ph/60Hz	**PRD15-115160**	1/2" NPT-F	**P3TFA94WCAN**	**P32FA94ESAN**	**P32FA94DSAN**
25 (43)	115V/1ph/60Hz	**PRD25-115160**	1/2" NPT-F	**P3TFA94WCAN**	**P32FA94ESAN**	**P32FA94DSAN**
35 (60)	115V/1ph/60Hz	**PRD35-115160**	1/2" NPT-F	**P3TFA94WCAN**	**P32FA94ESAN**	**P32FA94DSAN**
50 (85)	115V/1ph/60Hz	**PRD50-115160**	3/4" NPT-F	**P3TFA96WDAN**	**P33FA96ESAN**	**P33FA96DSAN**
75 (127)	115V/1ph/60Hz	**PRD75-115160**	3/4" NPT-F	**P3TFA96WDAN**	**P33FA96ESAN**	**P33FA96DSAN**
100 (170)	115V/1ph/60Hz	**PRD100-115160**	3/4" NPT-F	**P3TFA96WDAN**	**P3NFA96ESA**	**P3NFA96DSA**
125 (212)	115V/1ph/60Hz& 230V/1ph/60Hz	**PRD125-115160 PRD125-230160**	1-1/2" NPT-F	**P3TFA9BWGAN**	**P3NFA9PESA**	**P3NFA9PDSA**
150 (255)	115V/1ph/60Hz & 230V/1ph/60Hz	**PRD150-115160 PRD150-230160**	1-1/2" NPT-F	**P3TFA9BWGAN**	**P3NFA9PESA**	**P3NFA9PDSA**
175 (297)	115V/1ph/60Hz	**PRD175-230160**	1-1/2" NPT-F	**P3TFA9BWGAN**	**35F77BAP**	**35F77EAP**
200 (425)	230V/1ph/60Hz	**PRD200-230160**	1-1/2" NPT-F	**P3TFA9BWGAN**	**35F77BAP**	**35F77EAP**
250 (425)	230V/3ph/60Hz & 460V/3ph/60Hz	**PRD250-230360 PRD250-460360**	1-1/2" NPT-F	**P3TFA9BWGAN**	**35F77BAP**	**35F77EAP**
325 (552)	230V/3ph/60Hz & 460V/3ph/60Hz	**PRD325-230360 PRD325-460360**	2" NPT-F	**P3TFA9CWHAN**	**35F87BAP**	**35F87EAP**
400 (680)	230V/3ph/60Hz & 460V/3ph/60Hz	**PRD400-230360 PRD400-460360**	2" NPT-F	**P3TFA9CWHAN**	**35F87BAP**	**35F87EAP**
500 (849)	230V/3ph/60Hz & 460V/3ph/60Hz	**PRD500-230360 PRD500-460360**	2" NPT-F	**P3TFA9CWHAN**	**35F87BAP**	**35F87EAP**
700 (1189)	230V/3ph/60Hz & 460V/3ph/60Hz	**PRD700-230360 PRD700-460360**	3" NPT-M	**P3TFA9EWKAN**	**43FN7BAP**	**43FN7EAP**
800 (1359)	230V/3ph/60Hz & 460V/3ph/60Hz	**PRD800-230360 PRD800-460360**	3" NPT-M	**P3TFA9EWKAN**	**43FN7BAP**	**43FN7EAP**
1000 (1700)	460V/3ph/60Hz	**PRD1000-460360**	3" NPT-M	**P3TFA9EWKAN**	**43FN7BAP**	**43FN7EAP**
1200 (2039)	460V/3ph/60Hz	**PRD1200-460360**	3" NPT-M	**P3TFA9EWKAN**	**43FN7BAP**	**43FN7EAP**
1600 (2718)	460V/3ph/60Hz	**PRD1600-460360**	4" Flg.	**P3TFAFFW2AN**	**P3TFAFFQ2AN***	**P3TFAFFD2AN**
2000 (3400)	460V/3ph/60Hz	**PRD2000-460360**	6" Flg.	**P3TFAFGW3AN**	**P3TFAFGQ3AN***	**P3TFAFGD3AN**
2400 (4078)	460V/3ph/60Hz	**PRD2400-460360**	6" Flg.	**P3TFAFGW3AN**	**P3TFAFGQ3AN***	**P3TFAFGD3AN**

Most popular.

* 1µ coalescing

Parker Hannifin Corporation
Pneumatic Division
Richland, Michigan
www.parker.com/pneumatics

Operating information

		PRD10-PRD175	PRD200-PRD250	PRD325-PRD2400
Temperature:	Ambient (maximum)	122°F (50°C)	122°F (50°C)	122°F (50°C)
	Ambient (minimum)	41°F (5°C)	41°F (5°C)	41°F (5°C)
	Inlet (maximum)	149°F (65°C)	140°F (60°C)	140°F (60°C)
Pressure (maximum):		232 PSIG (16 bar)	203 PSIG (14 bar)	203 PSIG (14 bar)
Refrigerant:		R134a	R407C	R407C

Flow correction factors

Capacities are based upon:
Ambient temperature - 100°F (38°C); inlet temperature - 100°F (38°C);
and working pressure - 100 PSIG (7 bar g).

To obtain dryer capacity at new conditions, multiply nominal capacity x C1 x C2 x C3

	PRD10 - PRD175								PRD200 - PRD250							PRD325 - PRD2400						
Ambient temperature (C1)																						
°F	60	70	80	89	100	110	120		70	80	90	100	110	120	122	90	100	110	120	122		
°C	16	21	27	32	38	43	49		21	27	32	38	43	49	50	32	38	43	49	50		
Factor	1.34	1.26	1.17	1.09	1.00	0.91	0.82		1.22	1.15	1.05	1.00	0.94	0.79	0.71	1.05	1.00	0.94	0.79	0.71		
Inlet temperature (C2)																						
°F	90	100	110	120	140	149			90	100	110	120	130	140		90	100	110	120	130	140	
°C	32	38	43	49	60	65			32	38	43	49	54	60		32	38	43	49	54	60	
Factor	1.24	1.00	0.81	0.67	0.45	0.43			1.24	1.00	0.82	0.68	0.56	0.40		1.22	1.00	0.82	0.68	0.56	0.46	
Inlet pressure (C3)																						
PSIG	60	80	100	125	150	175	200	230	50	80	100	125	150	174	203	50	80	100	125	150	174	203
bar	4	6	7	9	10	12	14	16	3	6	7	9	10	12	14	3	6	7	9	10	12	14
Factor	0.83	0.93	1.00	1.07	1.12	1.16	1.19	1.22	0.77	0.93	1.00	1.07	1.12	1.15	1.18	0.77	0.93	1.00	1.07	1.12	1.15	1.18

Dimensions

PRD10-PRD250

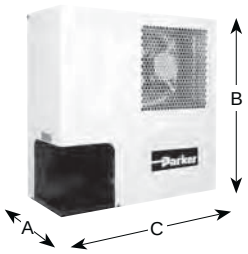

PRD325-PRD2400

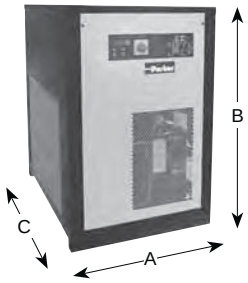

	A	B	C	Weight (kg)	Part number
PRD10-PRD250	8.3 (210)	17 (430)	17.7 (450)	42 (19)	**PRD10**
	8.3 (210)	17 (430)	17.7 (450)	42 (19)	**PRD15**
	8.3 (210)	19.9 (505)	19.7 (500)	52 (24)	**PRD25**
	8.3 (210)	19.9 (505)	19.7 (500)	52 (24)	**PRD35**
	8.9 (225)	22.3 (565)	20.5 (520)	58 (27)	**PRD50**
	8.9 (225)	22.3 (565)	20.5 (520)	68 (31)	**PRD75**
	8.9 (225)	22.3 (565)	20.5 (520)	77 (35)	**PRD100**
	16.7 (425)	23.8 (605)	21.8 (555)	115 (52)	**PRD125**
	16.7 (425)	23.8 (605)	21.8 (555)	128 (58)	**PRD150**
	16.7 (425)	23.8 (605)	21.8 (555)	132 (60)	**PRD175**
	28.0 (711)	37.0 (940)	22.0 (559)	183 (83)	**PRD200**
	28.0 (711)	42.0 (1067)	41.0 (1041)	287 (130)	**PRD250**
PRD325-PRD2400	28.0 (711)	42.0 (1067)	41.0 (1041)	320 (145)	**PRD325**
	28.0 (711)	42.0 (1067)	41.0 (1041)	320 (145)	**PRD400**
	28.0 (711)	42.0 (1067)	41.0 (1041)	342 (155)	**PRD500**
	32.0 (813)	52.0 (1321)	46.0 (1168)	529 (240)	**PRD700**
	32.0 (813)	52.0 (1321)	46.0 (1168)	529 (240)	**PRD800**
	32.0 (813)	52.0 (1321)	46.0 (1168)	551 (250)	**PRD1000**
	40.0 (1016)	67.0 (1702)	43.0 (1092)	816 (370)	**PRD1200**
	40.0 (1016)	68.0 (1727)	71.0 (1803)	1279 (580)	**PRD1600**
	40.0 (1016)	68.0 (1727)	71.0 (1803)	1477 (670)	**PRD2000**
	40.0 (1016)	68.0 (1727)	71.0 (1803)	1521 (690)	**PRD2400**

Inches (mm)

Parker Hannifin Corporation
Pneumatic Division
Richland, Michigan
www.parker.com/pneumatics

DD Inline Desiccant Dryers

- Inline desiccant dryers are a convenient and cost effective means of ensuring your sensitive intermittent pneumatic applications are never exposed to damaging moisture
- Compact size for point-of-use applications
- Drying efficiency down to -40°F pressure dew point
- Easily and quickly serviced
- Sightglass in bowl to monitor desiccant
- Built-in particulate after filter prevents downstream dust
- No electricity needed
- Low pressure drop
- No purge air lost as with other dryer types
- Check valve required on inlet
- Desiccant must be ordered separately

Operating information

Optimum working temperature:	Below 100°F
Operating temperature:	32°F to 180°F (0°C to 82°C)
Operating pressure:	0 to 300 PSIG Max (21 bar)

Inline Desiccant Dryers

	Part number SCFM / desiccant capacity[1]		
Port size	**15 SCFM / 2.5 lb.**	**30 SCFM / 5 lbs.**	**60 SCFM / 10 lbs.**
1/4[2]	**DD15-02**		
3/8[2]	**DD15-03**		
1/2[2]	**DD15-04**	**DD30-04**	**DD60-04**
3/4	**DD15-06**	**DD30-06**	**DD60-06**
1		**DD30-08**	**DD60-08**

Notes:
1. Desiccant must be ordered separately.
2. These units supplied with reducer bushings.

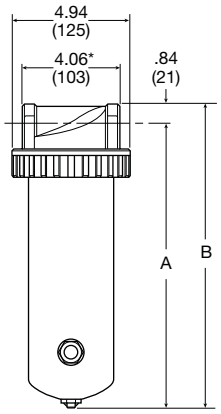

	A	B
DD15	12.69 (322)	13.5 (343)
DD30	22.44 (570)	23.25 (591)
DD60	29.44 (748)	30.25 (768)

* Dimension does not include reducer bushings for 1/4", 3/8", 1/2" versions.

Inches (mm)

Service kits

Description		Part number
Desiccant - silica gel		
	DD15	**DRP-14-447/003**
	DD30	**DRP-14-447/006**
	DD60	**DRP-14-447/012**
Mounting brackets (pair of pipe mounted brackets)		
	1 inch Pipe Size	**SA200CW57**

Specifications

Desiccant Capacity (Desiccant must be ordered separately)	
DD15	2.5 lb. (1.1 kg)
DD30	5 lb. (2.3 kg)
DD60	10 lb. (4.5 kg)

Material specifications

Bowl	DD15	Aluminum
	DD30	Aluminum
	DD60	Steel
Flow tube		CPVC
Filter element		Sintered bronze
Head & flange ring		Zinc
Other hardware		Brass
Seals		Buna-N
Sight glass		Glass & steel

Most popular.

Parker Hannifin Corporation
Pneumatic Division
Richland, Michigan
www.parker.com/pneumatics

Regenerative Desiccant Dryer – P3TJA

- Point of use application bringing clean dry air just where you need it
- Approved to international standards designed in accordance with ASME VIII Div.1, approved to CSA/UL/CRN and fully CE Marked (PED, EMC, LVD) as standard
- Simple to install - flexible installation utilising the multiple in-line inlet & outlet connection ports
- Compact and lightweight - can be floor, bench or wall / canopy mounted
- Very quiet operation - noise level less than 70dB(A)
- Can be installed almost anywhere, IP66 / NEMA 4 protection as standard
- Audible alarm - indicating service interval for optimal performance
- Simple & easy to maintain - due to the quick release top cap arrangement, which does NOT require the inlet / outlet ports to be disconnected as with traditional systems, maintenance can be achieved in under 15 minutes

The P3TJA is the reliable, cost effective and flexible way to provide clean dry air exactly where needed.

Operating information

Operating temperature:	35°F (1.5°C) max.
Inlet temperature:	122°F (50°C) max.
Operating pressure:	58 to 175 PSIG (4 to 21 bar)
Flow range:	3 SCFM to 20 SCFM @ 100 PSIG (85 L/min to 567 L/min @ 7 bar)
Noise level (Average):	70dB(A)
Pressure dewpoint – Standard	-40°F (-40°C) pdp
Standard electrical supply:	115/1ph/60Hz (Tolerance +/- 10%)
Controls:	Electronic control timer
Connections:	3/8 NPT

Regenerative Desiccant Dryer

P3TJA

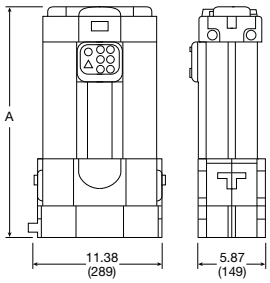

A	Weight (kg)	SCFM	Part number	Maintenance kit
16.6 (422)	24.2 (11)	3	**P3TJA93A1JN**	**P3TKA00JA1**
19.7 (500)	28.7 (13)	5	**P3TJA93A2JN**	**P3TKA00JA2**
24.2 (616)	35.3 (16)	8	**P3TJA93A3JN**	**P3TKA00JA3**
27.2 (692)	39.7 (18)	10	**P3TJA93A4JN**	**P3TKA00JA4**
33.3 (847)	44.1 (20)	13	**P3TJA93A5JN**	**P3TKA00JA5**
35.7 (906)	50.7 (23)	15	**P3TJA93A6JN**	**P3TKA00JA6**
43.2 (1098)	61.7 (28)	20	**P3TJA93A7JN**	**P3TKA00JA7**

Inches (mm)

Service kits

Description	Part number
Mounting Bracket	
Fixed wall	**P3TKA00MJ**
45° tilt wall	**P3TKA00MK**

Flow correction factors

Capacities are based upon:
Ambient temperature - 100°F (38°C); inlet temperature - 100°F (38°C); and working pressure - 100 PSIG (7 bar g).
To obtain dryer capacity at new conditions, multiply nominal capacity x C1 x C2 x C3

Minimum inlet pressure									
PSIG	58	73	87	100	116	135	145	160	175
bar g	4	5	6	7	8	9	10	11	12
Maximum inlet temperature									
95°F (35°C)	0.63	0.75	0.88	1.00	0.97	1.08	1.18	1.29	1.40
104°F (40°C)	0.61	0.73	0.85	0.97	0.94	1.05	1.14	1.25	1.36
113°F (45°C)	0.55	0.66	0.77	0.88	0.85	0.95	1.04	1.14	1.23
122°F (50°C)	0.46	0.55	0.64	0.73	0.71	0.79	0.86	0.94	1.02

☐ Most popular.

Parker Hannifin Corporation
Pneumatic Division
Richland, Michigan
www.parker.com/pneumatics

Heatless Desiccant Air Dryer – PTW Series

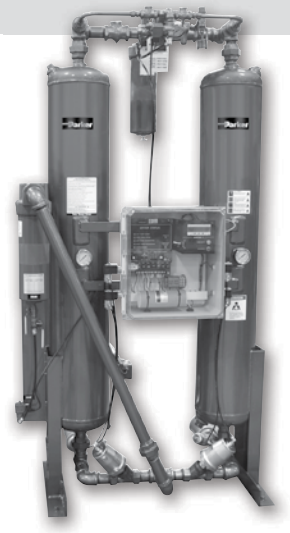

Parker PTW Series Heatless Desiccant Air Dryers remove water vapor from compresses air through a process known as pressure swing adsorption. Pressure dewpoints ranging from -40°F (-40°C) standard to -100°F (-70°C) optional are attained by directing the flow of saturated compressed air over a bed of desiccant.

Features

- Pre-filter and after filters included with dryers
- Solid state controller
- CycleLoc™ demand control
- Variable cyle control (models PTW75 - PTW800 SCFM)
- Purge Flow indicator
- Purge flow regulator (models PTW75 - PTW800 SCFM)
- Repressurization circuit (models PTW75 - PTW800 SCFM)
- Control air filter (models PTW75 - PTW800 SCFM)
- Safety valves
- Pressure equalization
- 150 PSIG design standard
- Moisture indicator (models PTW75 - PTW800 SCFM)

Options

- DDS Light / DDS (dewpoint dependent switching)

Operating information

Inlet or ambient air temperature:	120°F (49°C) maximum
Operating pressure:	50 PSIG (3.5 bar) minimum
Working pressure:	150 PSIG (10.5 bar) maximum
Pressure drop at rated flow:	less than 5 PSI (0.34 bar)

Heatless Desiccant Air Dryers

Capacity CFM @ 100 PSIG (m^3/min @ 6.9 bar)	Approximate purge SCFM (Nm^3/min)	Primary voltage	Part number	Port size	Filtration package included with dryer		
					Pre-filter (5µ)	Pre-filter (.01µ)	After-filter (1µ)
25 (.70)	4 (.11)	120V/1ph/60Hz	**PTW25***	1/2	**P32FA94FSAN**	**P32FA94DSAN**	**P32FA94QSAN**
42 (1.19)	6 (.19)	120V/1ph/60Hz	**PTW40***	1/2	**P33FA94FSAN**	**P33FA94DSAN**	**P33FA94QSAN**
60 (1.70)	9 (.25)	120V/1ph/60Hz	**PTW55***	3/4	**P33FA94FSAN**	**P33FA94DSAN**	**P33FA94QSAN**
75 (2.13)	11 (.31)	120V/1ph/60Hz	**PTW75***	3/4	**P3NFA96FSA**	**P3NFA96DSA**	**P3NFA96QSA**
107 (3.03)	16 (.45)	120V/1ph/60Hz	**PTW100***	1	**P3NFA98FSA**	**P3NFA98DSA**	**P3NFA98QSA**
135 (3.82)	20 (.56)	120V/1ph/60Hz	**PTW130***	1	**P3NFA98FSA**	**P3NFA98DSA**	**P3NFA98QSA**
200 (5.66)	30 (.84)	120V/1ph/60Hz	**PTW200***	1-1/2	**35F77BAP**	**35F77EAP**	**35F77HAP**
250 (7.07)	38 (1.07)	120V/1ph/60Hz	**PTW250***	1/1/2	**35F77BAP**	**35F77EAP**	**35F77HAP**
300 (8.49)	45 (1.27)	120V/1ph/60Hz	**PTW300***	1-1/2	**35F77BAP**	**35F77EAP**	**35F77HAP**
400 (11.32)	60 (1.69)	120V/1ph/60Hz	**PTW400***	2	**35F87BAP**	**35F87EAP**	**35F87HAP**
500 (14.44)	77 (2.18)	120V/1ph/60Hz	**PTW500***	2	**35F87BAP**	**35F87EAP**	**35F87HAP**
600 (18.40)	98 (2.77)	120V/1ph/60Hz	**PTW600***	2	**35F87BAP**	**35F87EAP**	**35F87HAP**
800 (22.65)	120 (3.39)	120V/1ph/60Hz	**PTW800***	2	**35F87BAP**	**35F87EAP**	**35F87HAP**

* Options: Dewpoint dependent switching (DDS).
DDS Light includes: energy saving purge cycle control with high humidity alarm and indicator light. When ordering use -DL as suffix.
DDS includes: energy saving purge cycle control with high humidity alarm and digital dewpoint display. When ordering use -DS as suffix

Most popular.

Parker Hannifin Corporation
Pneumatic Division
Richland, Michigan
www.parker.com/pneumatics

Flow correction factors

Capacities are based upon:

- Pressure drop at rated flow less than 5 PSI (0.34 bar)
- Maxium inlet air or ambient air temperature 120°F (49°C)
- Maximum working pressure: 150 PSIG (10.5 bar g) standard units for high maximum working pressure are available
- Minimum operating pressure: 50 PSIG (3.5 bar g)

Inlet air pressure correction

PSI	50	60	70	80	90	100	110	120	130	140	150
bar	3.5	4.1	4.9	5.5	6.2	6.9	7.6	8.3	9.0	9.7	10.3
Factor	.56	.65	.74	.83	.91	1.00	1.09	1.18	1.27	1.37	1.43

Inlet air temperature correction

°F	90	95	100	105	110	115	120
°C	32	35	38	41	43	46	49
Factor	1.35	1.16	1.00	.85	.74	.64	.56

Heatless Desiccant Air Dryers

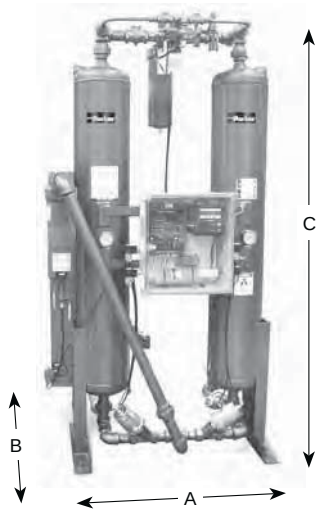

	A (length)	B (width)	C (height)	Weight lbs. (kg)	Part number
PTW series	19 (483)	16 (406)	64 (1626)	156 (71)	**PTW25***
	21 (533)	17 (432)	48 (1219)	190 (86)	**PTW40***
	21 (533)	20 (508)	67 (1702)	230 (104)	**PTW55***
	35 (889)	27 (686)	80 (2032)	384 (174)	**PTW75***
	35 (889)	27 (686)	80 (2032)	468 (212)	**PTW100***
	35 (899)	21 (533)	70 (1778)	496 (225)	**PTW130***
	44 (1118)	28 (711)	78 (1981)	692 (314)	**PTW200***
	44 (1118)	30 (762)	78 (1981)	776 (352)	**PTW250***
	44 (1118)	30 (762)	78 (1981)	796 (361)	**PTW300***
	74 (1880)	41 (1041)	84 (2134)	1626 (738)	**PTW400***
	74 (1880)	41 (1041)	85 (2159)	1735 (787)	**PTW500***
	74 (1880)	41 (1041)	86 (2184)	1740 (789)	**PTW600***
	74 (1880)	41 (1041)	91 (2311)	2120 (962)	**PTW800***

Inch (mm)

* Options: Dewpoint dependent switching (DDS).
DDS Light includes: energy saving purge cycle control with high humidity alarm and indicator light. When ordering use -DL as suffix.
DDS includes: energy saving purge cycle control with high humidity alarm and digital dewpoint display. When ordering use -DS as suffix.

Service kits

Element kits

	5µ	0.01µ	1.0µ
P32	**P32KA00ESE**	**P32KA00ESC**	**P32KA00ES9**
P33	**P33KA00ESE**	**P33KA00ESC**	**P33KA00ES9**
P3NF	**P3NKA00ESE**	**P3NKA00ESCB**	**P3KNA00ES9**
35F	**FRP-95-505**	**MTP-95-502**	**MSP-95-502**

Most popular.

Parker Hannifin Corporation
Pneumatic Division
Richland, Michigan
www.parker.com/pneumatics

Zero Air Loss Condensate Drains – ED Series

Zero air loss condensate drains are designed for economical removal of unwanted water, oil emulsions, and other liquids. These drains will only open when liquid is present and will not allow any compressed air to escape from the system.

Operating information

Maximum pressure:	232 PSIG (16 bar)
Ambient operating temperature:	35°F to 140°F (1.6°C to 60°C)
Voltages optional – NPT	115/50-60Hz, standard
BSPP ports	230/50-60Hz & 24VDC

Zero Air Loss Condensate Drains

Port size (NPT)	Compressor aftercooler (SCFM)*	Capacity refrigeration dryer (SCFM)**	Filter (SCFM)	Drain capacity per day (gal/liter)	Model number	Service kit
1 @ 3/8 (in), 1 @ 3/8 (out)	—	—	424	6 (22.7)	**ED3002N115-K**	**SKED3000N115**
1 @ 1/2 (in), 1 @ 3/8 (out)	141	282	1,413	13 (49.2)	**ED3004N115-K**	**SKED3000N115**
2 @ 1/2 (in), 1 @ 3/8 (out)	247	494	2,472	23 (87.1)	**ED3007N115-K**	**SKED3000N115**
2 @ 1/2 (in), 1 @ 3/8 (out)	1,059	2,119	10,594	100 (378.5)	**ED3030N115-K**	**SKED3000N115**
2 @ 1/2 (in), 1 @ 3/8 (out)	3,532	7,063	35,315	330 (1,249.2)	**ED3100N115-K**	**SKED3000N115**

* Based on 100 PSI working pressure, air compressor inlet at 77°F (25°C) at 60% RH, air discharge temperature od 95°F (35°C) following the aftercooler, pressure dewpoint of 37°F (2.8°C) after the refrigerated dryer.

** Condensate from aftercooler or refrigerated dryer to be drained upstream – only for residual oil content or small quantities of condensate.

Note: A 6 ft. line cord will be included with each drain.

Where Are Condensate Drains Used?

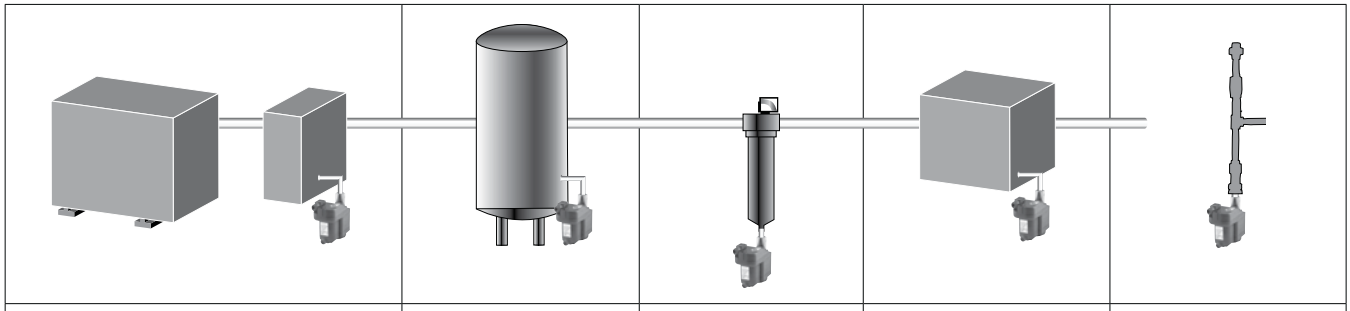

Compressor with Aftercooler	Receiver Tank	Filter	Air Dryer	Drip Leg
Removes the condensate that is collected after the air cools in the aftercooler	Removes the condensate that is collected when the air cools inside of the receiver tank	Removes the condensate that is collected in the filter bowl	Removes the condensate that is collected in the air dryer	Point-of-use applications: removes the condensate from compressed air pipes in a plant

Dimensions

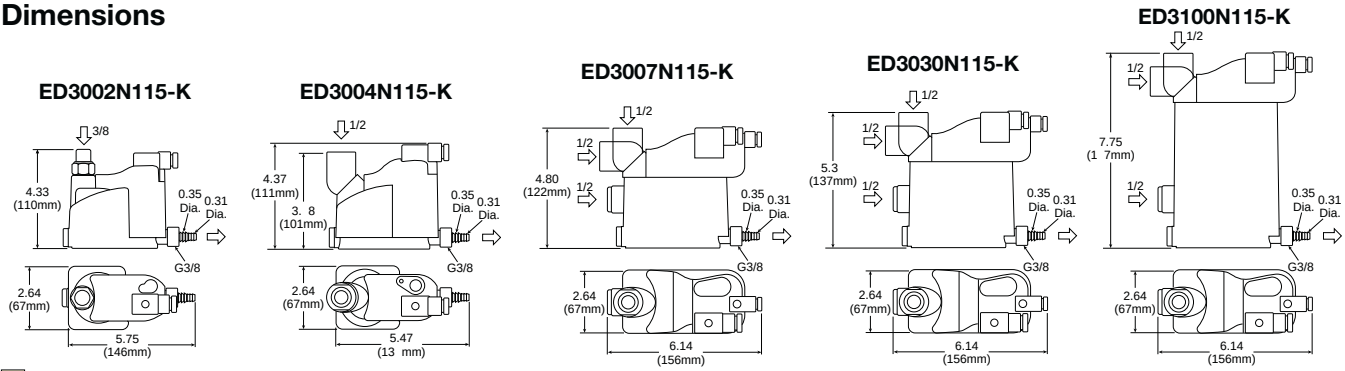

Most popular.

Parker Hannifin Corporation
Pneumatic Division
Richland, Michigan
www.parker.com/pneumatics

Automatic Electrical Drain Valve – WDV3-G

The WDV3 Electrical Drain is designed to remove condensate from compressors, compressed air dryers and receivers up to any size, type or manufacturer.

Benefits

- Does not air-lock during operation
- Compressed air systems up to any size
- The direct acting valve is serviceable
- Suitable for all types of compressors
- Test (micro-switch) feature
- High time cycle accuracy
- Large (4.5mm) valve orifice

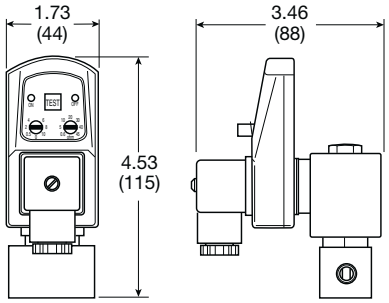

Automatic Electrical Drain Valve

Port size	Primary voltage	Weight (kg)	Model number
1/4	120VAC	1.8 (0.8 kg)	**WDV3-G12BL**
1/4	230VAC	1.8 (0.8 kg)	**WDV3-G22BL**
3/8	120VAC	1.8 (0.8 kg)	**WDV3-G13BL**
3/8	230VAC	1.8 (0.8 kg)	**WDV3-G23BL**
1/2	120VAC	1.8 (0.8 kg)	**WDV3-G14BL**
1/2	230VAC	1.8 (0.8 kg)	**WDV3-G24BL**
1/2	24VDC	1.8 (0.8 kg)	**WDV3-G34BL**

Operating information

Operating pressure:	230 PSIG (16 bar)
Ambient operating temperature:	34°F to 130°F (1.1°C to 54°C)
Voltages:	115VAC, 230/50-60Hz, 24VDC
Coil insulation:	Class H, 340°F (171.1°C)
Current rating:	4mA maximum
Timer –	
Open time	.5 to 10 sec., adjustable
Cycle time	.5 to 45 min., adjustable

Material specifications

Description	
Valve body	Brass / stainless steel
Enclosure (IP65 / NEMA 4)	ABS plastic
Internal parts	Brass / stainless steel
Valve seals	FPM (Fluorocarbon)

Parker Hannifin Corporation
Pneumatic Division
Richland, Michigan
www.parker.com/pneumatics