OSP-P Series

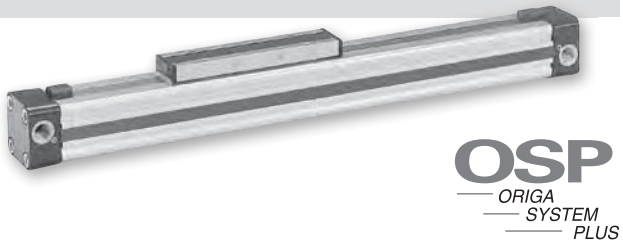

Standard Features:

- Double-acting with adjustable cushions
- With magnetic piston for position sensing
- Standard stroke lengths to 6000mm. Long stroke versions available upon request
- End cap can be rotated 4 x 90° to position ports as desired

Optional Features:

- Clean room cylinders
- Stainless steel screws
- Slow speed lubrication
- Fluorocarbon seals
- Single end porting
- Integrated valves
- Integrated bearing options

Operating information

Operating pressure:	117 PSIG (8 bar)
Temperature range:	-10°F to 80°F (14°C to 176°C)
Filtration requirements:	Filtered, nonlubricated compressed air

Material specifications

Cylinder profile	Anodized aluminum
Carrier (piston)	Anodized aluminum
End caps	Aluminum, lacquered / plastic (P10)
Sealing bands	Corrosion resistant steel
Seals	NBR (Option: Fluorocarbon)
Screws	Galvanized steel Option: stainless steel
Dust covers, wipers	Composite

Features

Characteristics	Description
Type	Rodless cylinder
Series	OSP-P
Stroke length	5.5m (216 inches)
System	Double-acting, with cushions and magnetic piston
Mounting	See drawings
Air connection	Threaded
Weight (mass)	See table below
Installation	In any position
Lubrication	Prelubricated at the factory (additional oil mist lubrication not required) Option: special slow speed grease

Weight (mass) kg

Cylinder series (Basic cylinder)	Weight (Mass) kg	
	At 0 mm stroke	per 100 mm stroke
OSP-P10	0.087	0.052
OSP-P16	0.22	0.1
OSP-P25	0.65	0.197
OSP-P32	1.44	0.354
OSP-P40	1.95	0.415
OSP-P50	3.53	0.566
OSP-P63	6.41	0.925
OSP-P80	12.46	1.262

Size Comparison

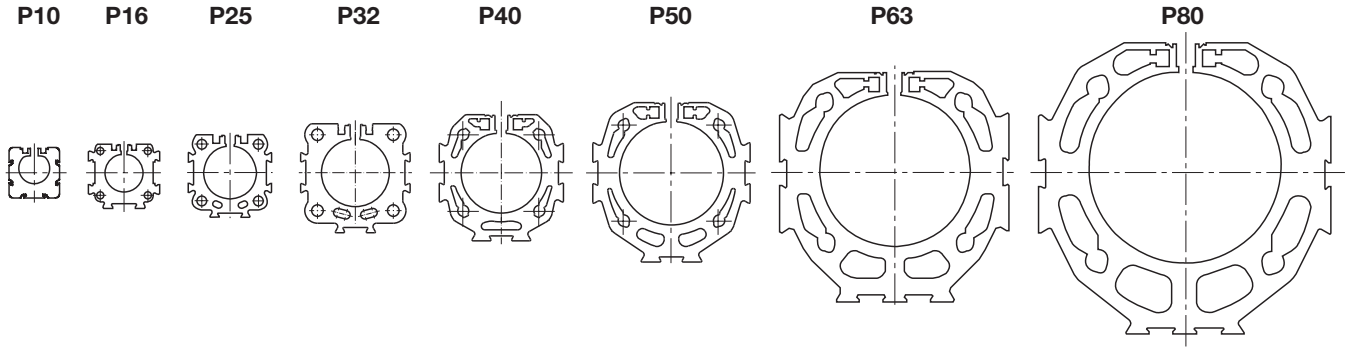

Parker Hannifin Corporation
Pneumatic Division
Richland, Michigan
www.parker.com/pneumatics

ORIGA SYSTEM PLUS – innovation from a proven design

A new generation of linear drives which can be simply and neatly integrated into any machine layout.

A new modular linear drive system

With this second generation linear drive the OSP-P series offers design engineers complete flexibility.

The well known ORIGA cylinder has been further developed into a combined linear actuator, guidance and control package. It forms the basis for the the OSP-P linear drive system.

All additional functions are designed into modular system components which replace the previous series of cylinders.

Mounting rails on 3 sides

Mounting rails on 3 sides of the cylinder enable modular components such as linear guides, brakes, valves, magnetic switches etc. to be fitted to the cylinder itself. This solves many installation problems, especially where space is limited.

The modular system concept forms an ideal basis for additional customer-specific functions.

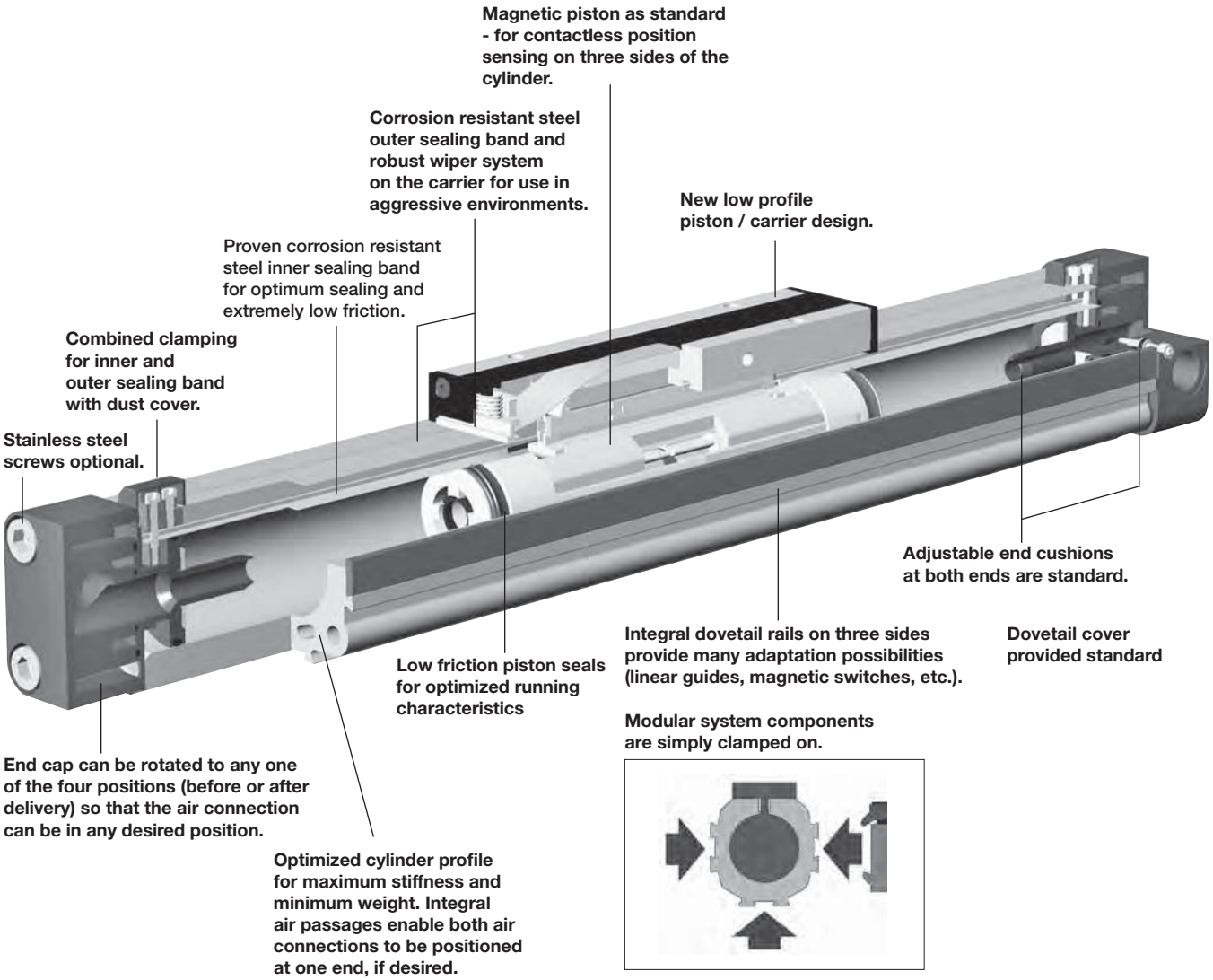

Parker Hannifin Corporation
Pneumatic Division
Richland, Michigan
www.parker.com/pneumatics

Plain Bearing Guide SLIDELINE

- Available on 16 to 80mm bore

Features:

- Adjustable composite slide elements – optional integral brake
- Integrated sealing system with wiper elements to remove dirt and lubricate the slideways
- Any length of stroke up to 5500 mm

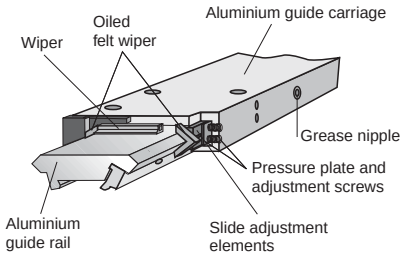

Roller Guide POWERSLIDE

- Available on 16 to 50mm bore

Features:

- Anodized aluminum guide carriage with vee rollers
- Hardened steel guide rail
- Multiple guide sizes can be used on the same drive
- Max. Speed v = 3 m/s
- Integrated wiper and grease nipple
- Any length of stroke up to 3500 mm

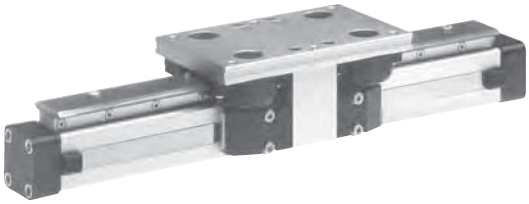

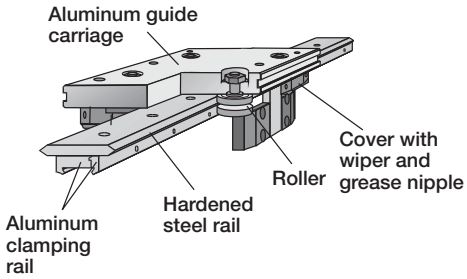

Parker Hannifin Corporation
Pneumatic Division
Richland, Michigan
www.parker.com/pneumatics

Ordering information / part numbering system for OSP-P rodless basic pneumatic series

1-4	5-6	7	8	9	10	11	12-16	17	18	19	20	21	22	23	24	25
OSPP	25	0	1	0	0	0	01100	0	0	0	0	0	0	1	0	0

Bore

10
16
25
32
40
50
63
80

Piston style

0	Standard
1	Tandem

Porting configurations†

0	Standard
1	End Face (position #5)‡
2	Single End Ports

Seals

0	Buna-N
1	Flurocarbon

Lubrication

0	Standard

Fasteners

0	Chrome plated
1	Stainless steel

Stroke

x x x x x

Port orientation†

0	Position #2 (both ends)
1	Position #3 (both ends)
2	Position #4 (both ends)

Cushions

0	Standard

Piston mounting

0	Standard*
1	Clevis mount

Guides / Brakes

0	None
2	Slideline
3	Slideline with active brake
4	Slideline with multi brake
A	Active brake (basic OSP)
E	Powerslide (PSXX/25) (16, 25mm bore only)
G	Powerslide (PSXX/45) (25, 32, 40mm bore only)
H	Powerslide (PSXX/60) (40, 50mm bore only)
I	Powerslide (PSXX/76) (50mm bore only)
M	Inversion (NR30) (16 - 80mm bore only)

Additional carriages**

0	None
2	Slide / Proline
3	Slide / Proline with AB

Dovetail cover

0	Standard
X	No Cover

Mounting

0	None
1	A1 type
4	B1 type
9	C1 type

Version

0	Standard

Switches

0	None, order switches separately

* For Joint Clamp connecting plate, order separately
** When selecting additional carriages, the tandem piston option must also be selected
† Single end ports can not be rotated in the field
‡ Only available on 50mm bore

Sensors

For sensors see page B339.

Parker Hannifin Corporation
Pneumatic Division
Richland, Michigan
www.parker.com/pneumatics

Loads, forces and moments

When sizing an OSP cylinder, consideration must be given to:

- Loads, forces and moments
- Performance of the pneumatic end cushions. The main factors are the mass to be cushioned and the piston speed (unless external cushioning is used, e. g. hydraulic shock absorbers)

To determine the maximum values for light, shock-free operation, which must not be exceeded even in dynamic operation.

Load and moment data are based on speeds v ≤ 0.5 m/s.

When working out the action force required, it is essential to take into account the friction forces generated by the specific application or load.

The sum total of each of these types of moments, divided by each of the maximum values, determines a Load-Moment Factor (LMF) should be equal to or less than 1.0. On horizontal mountings, the total load (L) should also be divided by the maximum load allowable and factored into the equation.

Horizontal Mountings:

$$\frac{L}{[L]} + \frac{M}{[M]} + \frac{Ms}{[Ms]} + \frac{Mv}{[Mv]} = LMF \leq 1.0$$

Vertical Mountings:

$$\frac{M}{[M]} + \frac{Ms}{[Ms]} + \frac{Mv}{[Mv]} = LMF \leq 1.0$$

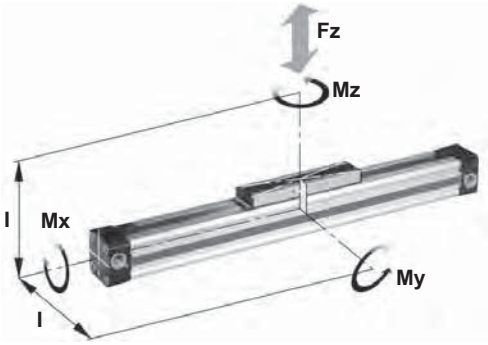

M = F ·l

Bending moments are calculated from the center of the linear actuator

Cylinder series (mm Ø)	Theoretical output force at 6 bar N (lb)	Actual output force F_A at 6 bar N (lb)	Max. moments Mx Nm (in lb)	My Nm (in lb)	Mz Nm (in lb)	Max. load F N (lb)	Cushion length (mm)
OSP-P10	47 (10.6)	32 (7.2)	0.2 (1.8)	1 (8.9)	0.3 (2.7)	20 (4.5)	2.5 * (.09)
OSP-P16	120 (26.9)	78 (17.5)	0.45 (3.9)	4 (35.4)	0.5 (4.4)	120 (26.9)	11 (.43)
OSP-P25	295 (66.3)	250 (56.2)	1.5 (13.3)	15 (132.8)	3 (26.6)	300 (67.4)	17 (.67)
OSP-P32	483 (108.6)	420 (94.4)	3 (26.6)	30 (265.5)	5 (44.3)	450 (101.2)	20 (.79)
OSP-P40	754 (169.5)	640 (143.9)	6 (53.1)	60 (531)	8 (70.8)	750 (168.6)	27 (1.06)
OSP-P50	1178 (264.8)	1000 (224.8)	10 (88.5)	115 (1017.8)	15 (132.8)	1200 (269.8)	30 (1.18)
OSP-P63	1870 (420.4)	1550 (348.5)	12 (106.2)	200 (1771)	24 (212.4)	1650 (370.9)	32 (1.26)
OSP-P80	3016 (678)	2600 (584.5)	24 (212.4)	360 (3186)	48 (424.8)	2400 (539.5)	39 (1.54)

* A rubber element (non-adjustable) is used for end cushioning.
To deform the rubber element enough to reach the absolute end position would require a Dp of 4 bar!

Cushioning diagram

Determine the moving mass and follow the chart below to determine the maximum cylinder velocity.

Alternatively, take your desired velocity and moving mass to determine the required cylinder diameter.

If these maximum permissible values are exceeded, additional shock absorbers must be used.

For sizing a basic cylinder, use the adjacent chart. To size a cylinder with guide bearing, use the charts on the following page.

The peak piston velocity can be determined by assuming it is 50% greater than the average velocity. The peak velocity should be used in sizing the cylinder cushions.

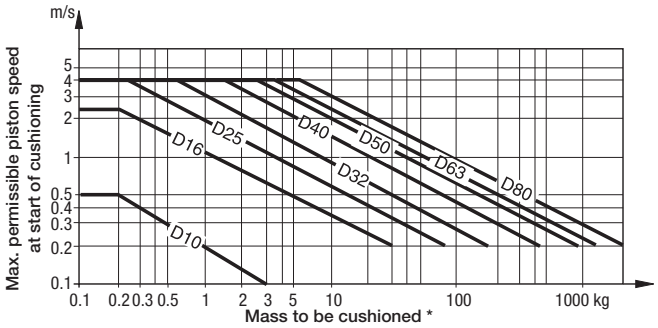

* For cylinders with linear guides or brakes, please be sure to take the mass of the carriage or the brake housing into account.

Parker Hannifin Corporation
Pneumatic Division
Richland, Michigan
www.parker.com/pneumatics

SLIDELINE loads, forces and moments

Stroke up to 5500 mm (longer strokes on request)

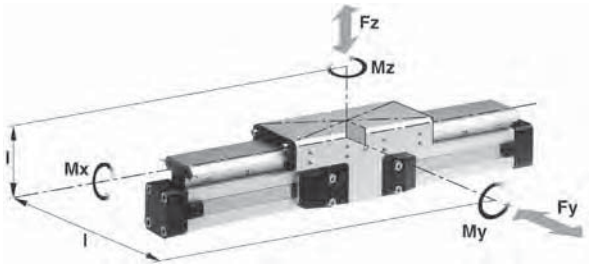

Technical data

The table shows the maximum permissible values for smooth operation, which should not be exceeded even under dynamic conditions.

The load and moment figures apply to speeds v < 0.2 m/s.

Series	For linear drive	Max. moments (Nm)			Max. loads (N)	Mass of linear drive with guide (kg)		
		Mx	My	Mz	Fy, Fz	With 0mm stroke	Increase per 100mm stroke	Mass * of guide carriage (kg)
SL16	OSP-P16	6	11	11	325	0.57	0.22	0.23
SL25	OSP-P25	14	34	34	675	1.55	0.39	0.61
SL32	OSP-P32	29	60	60	925	2.98	0.65	0.95
SL40	OSP-P40	50	110	110	1500	4.05	0.78	1.22
SL50	OSP-P50	77	180	180	2000	6.72	0.97	2.06
SL63	OSP-P63	120	260	260	2500	11.66	1.47	3.32
SL80	OSP-P80	120	260	260	2500	15.71	1.81	3.32

* Add the mass of the guide carriage to the mass to be cushioned.

POWERSLIDE loads, forces and moments

Stroke up to 3500 mm

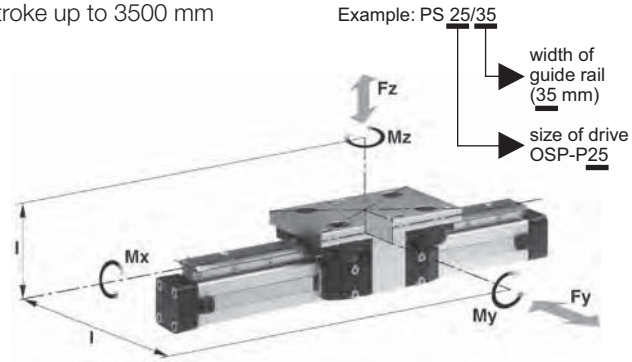

Technical data

The table shows the maximum permissible values for smooth operation, which should not be exceeded even under dynamic conditions.

For further information and technical data see linear drives OSP-P.

*** Please note:**
In the cushioning diagram, add the mass of the guide carriage to the mass to be cushioned.

Series	For linear drive	Max. moments (Nm)			Max. load (N)	Mass of linear drive with guide (kg)		
		Mx	My	Mz	Fy, Fz	With 0 mm stroke	Increase per 100mm stroke	Mass * of guide carriage (kg)
PS 16/25	OSP-P16	14	45	45	1400	0.93	0.24	0.7
PS 25/25	OSP-P25	14	63	63	1400	1.5	0.4	0.7
PS 25/35	OSP-P25	20	70	70	1400	1.7	0.4	0.8
PS 25/44	OSP-P25	65	175	175	3000	2.6	0.5	1.5
PS 32/35	OSP-P32	20	70	70	1400	2.6	0.6	0.8
PS 32/44	OSP-P32	65	175	175	3000	3.4	0.7	1.5
PS 40/44	OSP-P40	65	175	175	3000	4.6	1.1	1.5
PS 40/60	OSP-P40	90	250	250	3000	6	1.3	2.2
PS 50/60	OSP-P50	90	250	250	3000	7.6	1.4	2.3
PS 50/76	OSP-P50	140	350	350	4000	11.5	1.8	4.9

* Add the mass of the guide carriage to the mass to be cushioned.

Parker Hannifin Corporation
Pneumatic Division
Richland, Michigan
www.parker.com/pneumatics

Intermediate supports

To avoid excessive bending and oscillation of the cylinder, intermediate supports may be required. The diagrams below show the maximum permissible support spacing based upon load.

Bending up to 0.5 mm is permissible between supports. The intermediate supports are clamped to the dovetail profile and support the cylinder tube axially.

For cylinders with guide bearings, distinguish between loading scenario 1 and loading scenario 2.

See accessories section for intermediate support dimensions and part numbers

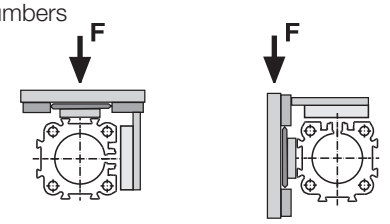

Loading 1 Loading 2

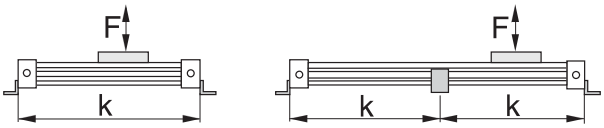

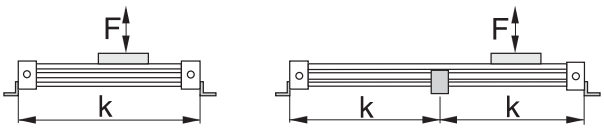

Basic cylinder 10 to 32mm bore intermediate supports

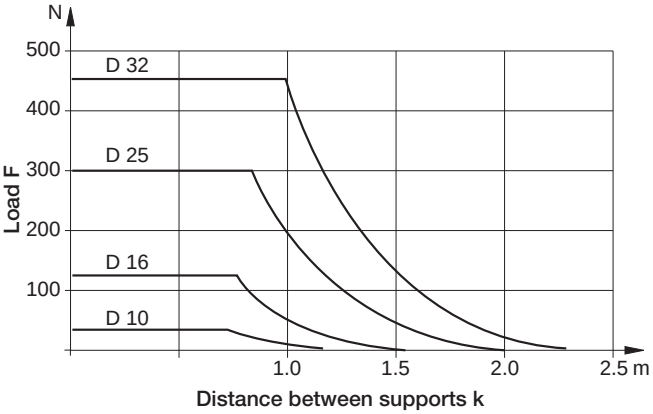

Basic cylinder 40 to 80mm bore intermediate supports

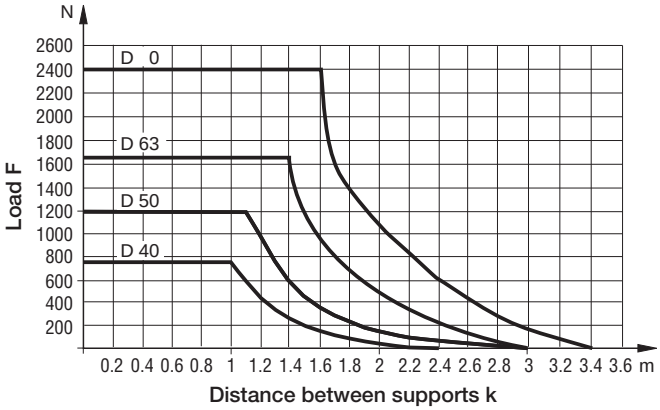

SLIDELINE 16 to 32mm bore intermediate supports

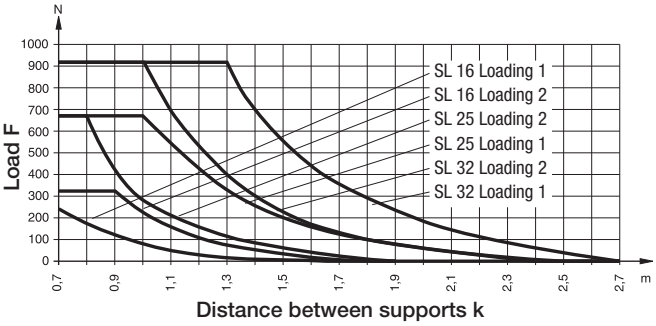

SLIDELINE 40 to 80mm bore intermediate supports

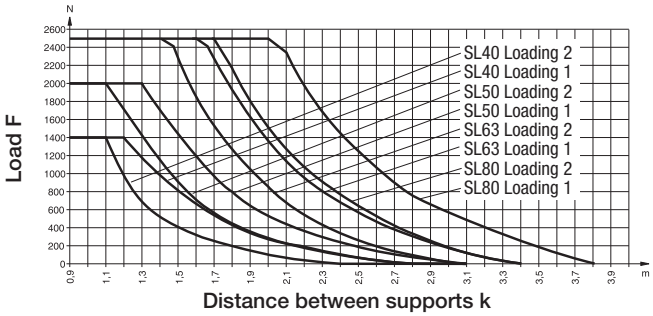

Parker Hannifin Corporation
Pneumatic Division
Richland, Michigan
www.parker.com/pneumatics

POWERSLIDE 16/25, 25/25, 25/35, 25/44mm bore intermediate supports

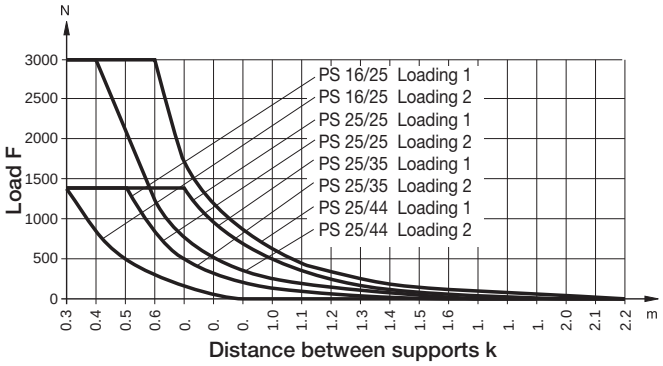

POWERSLIDE 2/35, 32/44mm bore intermediate supports

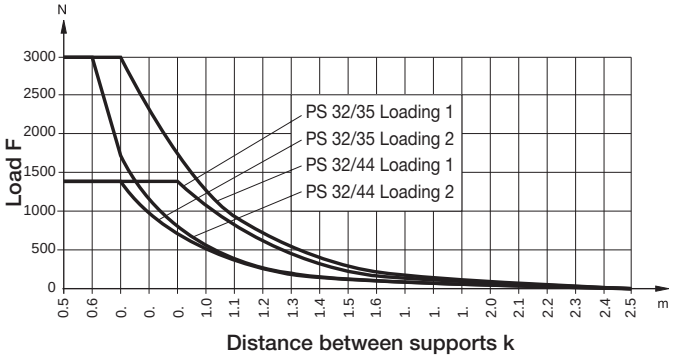

POWERSLIDE 40/44, 40/60mm bore intermediate supports

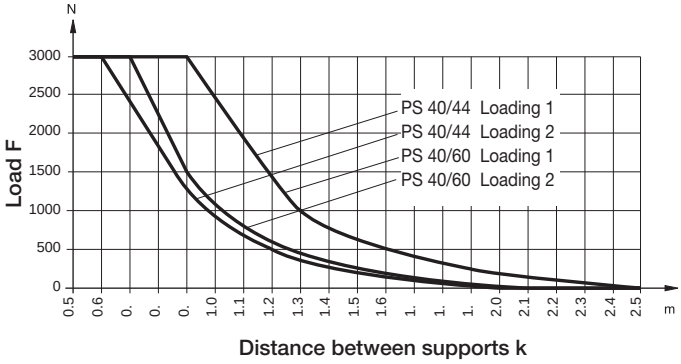

POWERSLIDE 50/60, 50/76mm bore intermediate supports

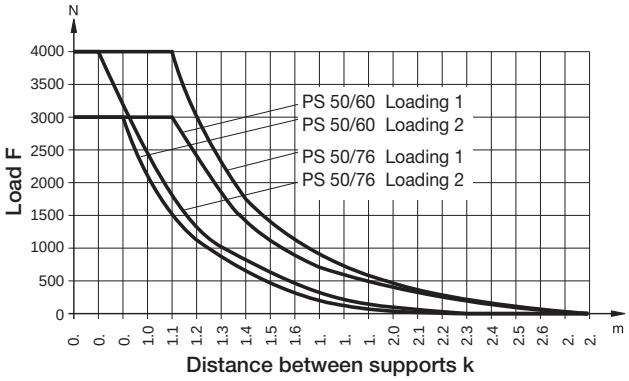

Parker Hannifin Corporation
Pneumatic Division
Richland, Michigan
www.parker.com/pneumatics

Basic cylinder dimensions – 10mm bore

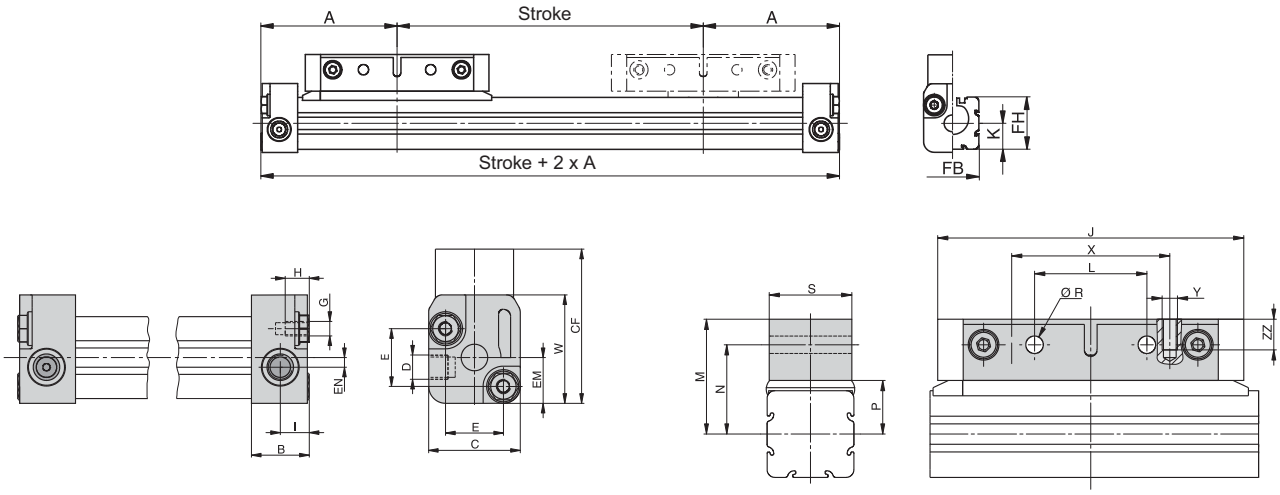

Dimensions (mm)

Series	A	B	C	D	E	G	H	I	J	K	L	M	N	P	R	S	W	X	Y	Zmin	CF	EM	EN	FB	FH	ZZ
OSP-P10	44.5	12	19	M5	12	M3	5	6	60	8.5	22	22.5	17.5	10.5	3.4	16	22.5	31	M3	64	32	9.5	2	17	17	6

Basic cylinder dimensions – 16 to 80mm bore

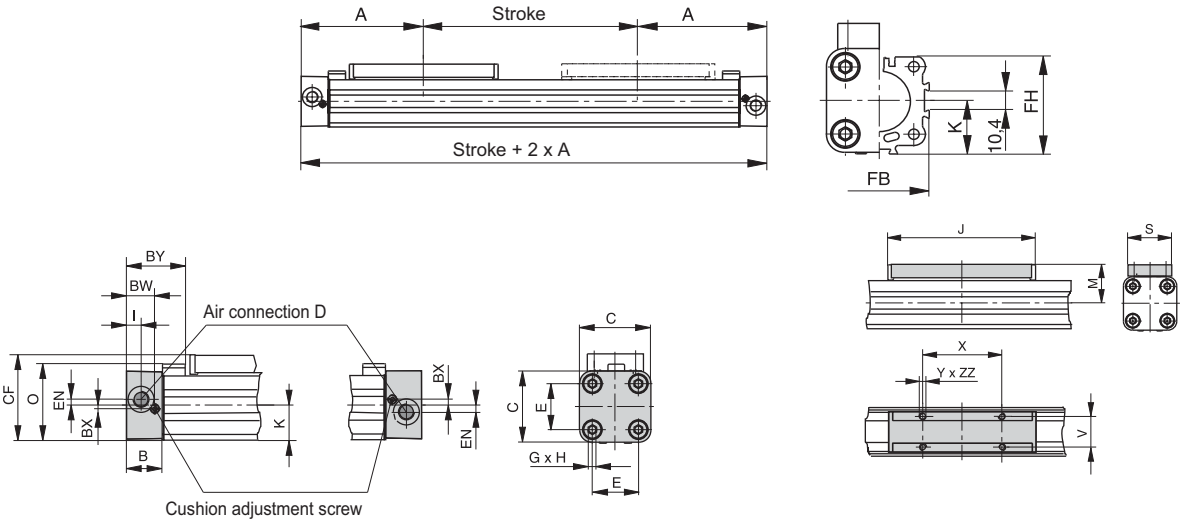

Dimensions (mm)

Series	A	B	C	D	E	G	H	I	J	K	M	O	S	V	X	Y	Z	BW	BX	BY	CF	EN	FB	FH	ZZ
OSP-P16	65	14	30	M5	18	M3	9	5.5	69	15	23	33.2	22	16.5	36	M4	81	10.8	1.8	28.4	38	3	30	27.2	7
OSP-P25	100	22	41	G1/8	27	M5	15	9	117	21.5	31	47	33	25	65	M5	128	17.5	2.2	40	52.5	3.6	40	39.5	8
OSP-P32	125	25.5	52	G1/4	36	M6	15	11.5	152	28.5	38	59	36	27	90	M6	170	20.5	2.5	44	66.5	5.5	52	51.7	1
OSP-P40	150	28	69	G1/4	54	M6	15	12	152	34	44	72	36	27	90	M6	212	21	3	54	78.5	7.5	62	63	10
OSP-P50	175	33	87	G1/4	70	M6	15	14.5	200	43	49	86	36	27	110	M6	251	27	–	59	92.5	11	76	77	10
OSP-P63	215	38	106	G3/8	78	M8	21	14.5	256	54	63	107	50	34	140	M8	313	30	–	64	117	12	96	96	16
OSP-P80	260	47	132	G1/2	96	M10	25	22	348	67	80	133	52	36	190	M10	384	37.5	–	73	147	16.5	122	122	20

Parker Hannifin Corporation
Pneumatic Division
Richland, Michigan
www.parker.com/pneumatics

SLIDELINE Dimensions

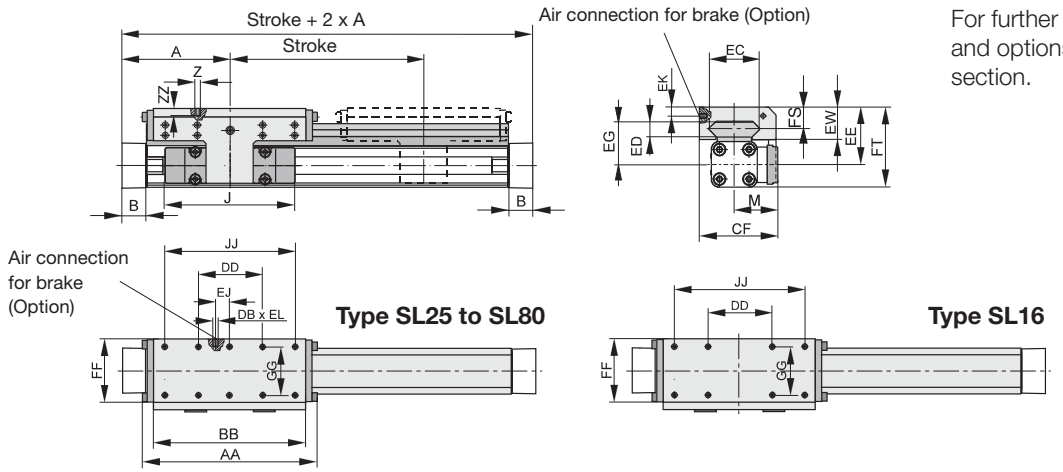

For further mounting accessories and options see accessories section.

Dimensions (mm)

Series	A	B	J	M	Z	AA	BB	DB	DD	CF	EC	ED	EE	EG	EJ	EK	EL	EW	FF	FT	FS	GG	JJ	ZZ
SL 16	65	14	69	31	M4	106	88	–	30	55	36	8	40	30	–	–	–	22	48	55	14	36	70	8
SL 25	100	22	117	40.5	M6	162	142	M5	60	72.5	47	12	53	39	22	6	6	30	64	73.5	20	50	120	12
SL 32	125	25.5	152	49	M6	205	185	M5	80	91	67	14	62	48	32	6	6	33	84	88	21	64	160	12
SL 40	150	28	152	55	M6	240	220	M5	100	102	77	14	64	50	58	6	6	34	94	98.5	21.5	78	200	12
SL 50	175	33	200	62	M6	284	264	M5	120	117	94	14	75	56	81	6	6	39	110	118.5	26	90	240	16
SL 63	215	38	256	79	M8	312	292	–	130	152	116	18	86	66	–	–	–	46	152	139	29	120	260	14
SL 80	260	47	348	96	M8	312	292	–	130	169	116	18	99	79	–	–	–	46	152	165	29	120	260	14

POWERSLIDE Dimensions

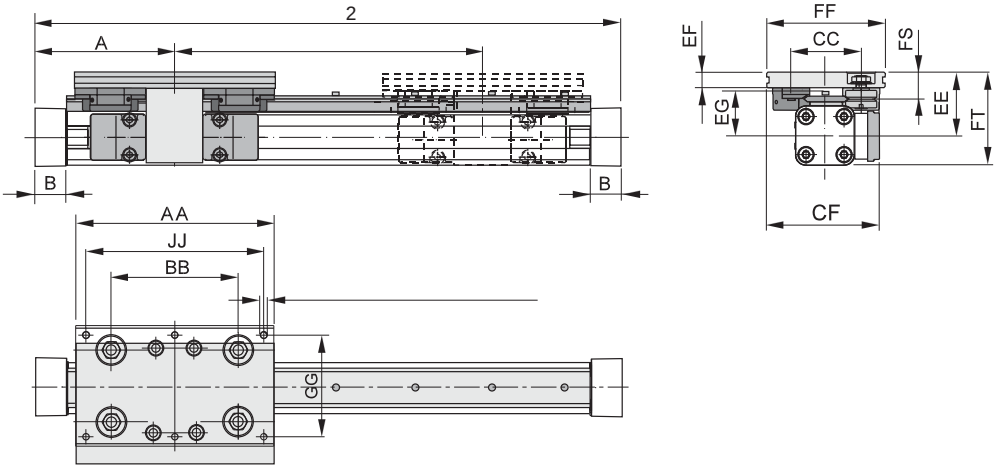

Dimensions (mm)

Series	A	B	Z	AA	BB	CC	CF	EE	EF	EG	FF	FS	FT	GG	JJ
PS 16/25	65	14	4xM6	120	65	47	80	49	12	35	80	21	64	64	100
PS 25/25	100	22	6xM6	145	90	47	79.5	53	11	39	80	20	73.5	64	125
PS 25/35	100	22	6xM6	156	100	57	89.5	52.5	12.5	37.5	95	21.5	73	80	140
PS 25/44	100	22	6xM8	190	118	73	100	58	15	39	116	26	78.5	96	164
PS 32/35	125	25.5	6xM6	156	100	57	95.5	58.5	12.5	43.5	95	21.5	84.5	80	140
PS 32/44	125	25.5	6xM8	190	118	73	107	64	15	45	116	26	90	96	164
PS 40/44	150	28	6xM8	190	118	73	112.5	75	15	56	116	26	109.5	96	164
PS 40/60	150	28	6xM8	240	167	89	122.5	74	17	54	135	28.5	108.5	115	216
PS 50/60	175	33	6xM8	240	167	89	130.5	81	17	61	135	28.5	123.5	115	216
PS 50/76	175	33	6xM10	280	178	119	155.5	93	20	64	185	39	135.5	160	250

Parker Hannifin Corporation
Pneumatic Division
Richland, Michigan
www.parker.com/pneumatics

Piston Options

Tandem pistons can be ordered to provide a larger mounting footprint. This option reduces the travel of the piston. When specifying the stroke of the cylinder, include the desired travel + Z dimension.

Please note Zmin dimension.

10mm bore

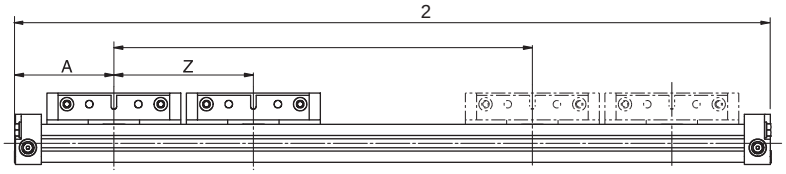

Dimensions (mm)

Series	A	Zmin
OSP-P10	44.5	64

16 to 80mm bore

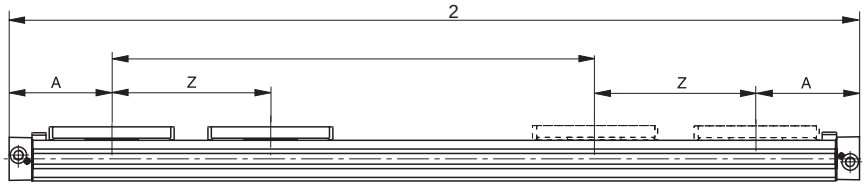

Dimensions (mm)

Series	A	Z min
OSP-P16	65	81
OSP-P25	100	128
OSP-P32	125	170
OSP-P40	150	212
OSP-P50	175	251
OSP-P63	215	313
OSP-P80	260	384

Port orientation

When determining port orientation, the piston carriage is always at position 1. When a bearing system is order, the piston carriage is at position 1 and the bearing carriage is at position 2.

End caps can be field rotated to move port locations, excluding single ended port configurations

Note: Single end ports and port position 5 not available on 10 to 40mm bore.

Cylinder with guide end cap positioning

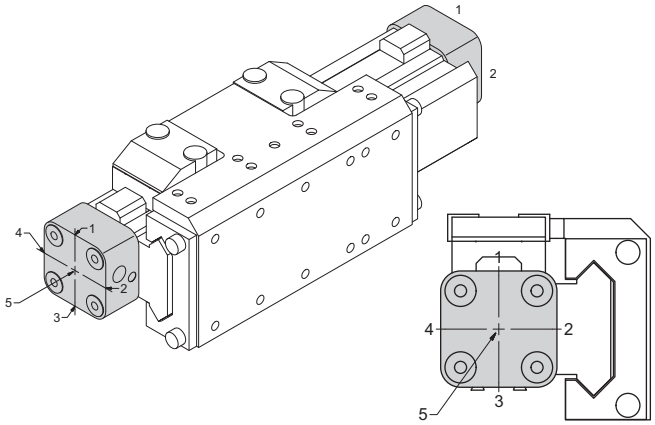

Basic cylinder end cap positioning

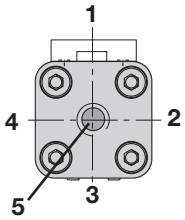

Parker Hannifin Corporation
Pneumatic Division
Richland, Michigan
www.parker.com/pneumatics

Joint Clamp Connection ø 25-50 mm

The joint clamp connection combines two OSP-P cylinders of the same size into a compact unit with high performance.

Features
Increased load and torque capacity

Higher driving forces

Included with Joint Clamp:
2 clamping profiles with screws
1 mounting plate

Included with Multiplex:
2 clamping profiles with screws

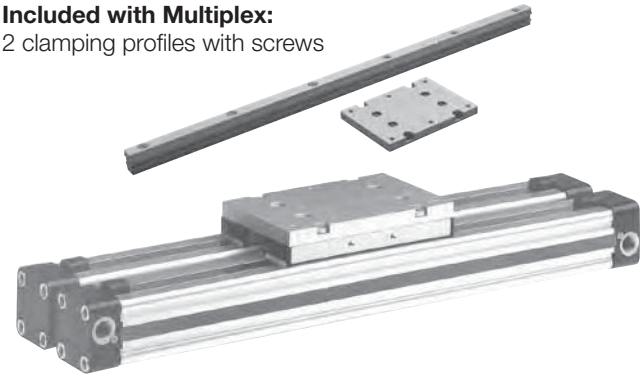

Series	Order number	
	Joint clamp	Multiplex
OSP-P25	**20153-sssss**	**20035-sssss**
OSP-P32	**20290-sssss**	**20167-sssss**
OSP-P40	**20156-sssss**	**20036-sssss**
OSP-P50	**20292-sssss**	**20168-sssss**

Note: sssss = stroke of cylinder

Clevis Mounting, ø 16-80 mm

When external guides are used, parallelism deviations can lead to mechanical strain on the piston. This can be avoided by the use of a clevis mounting.

In the drive direction, the mounting has very little play.

Freedom of movement is provided as follows:

- Tilting in direction of movement
- Vertical compensation
- Tilting sideways
- Horizontal compensation

Series	Order number	
	Standard	Stainless
OSP-P16	**20462**	**20463**
OSP-P25	**20005**	**20092**
OSP-P32	**20096**	**20094**
OSP-P40	**20024**	**20093**
OSP-P50	**20097**	**20095**
OSP-P63	**20466**	**20467**
OSP-P80	**20477**	**20478**

Inversion Mounting, ø 16-80 mm

In dirty environments, or where there are special space restrictions, inversion of the cylinder is recommended.

The inversion bracket transfers the driving force to the opposite side of the cylinder. The size and position of the mounting holes are the same as on the standard cylinder.

Please note:
Other components of the OSP system such as **mid-section supports, magnetic switches** and the **external air passage for the 16mm bore**, can still be mounted on the free side of the cylinder.

When combining single end porting with inversion mountings, RS magnetic switches can only be mounted directly opposite to the external air-supply profile.

Series	Order number
OSP-P16	**20446**
OSP-P25	**20037**
OSP-P32	**20161**
OSP-P40	**20039**
OSP-P50	**20166**
OSP-P63	**20459**
OSP-P80	**20490**

Series OSP-P16 to 32

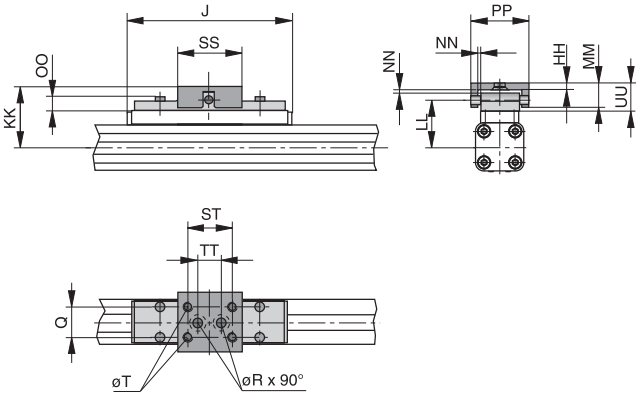

Dimensions (mm)

Series	J	Q	T	ø R	HH	KK	LL	MM	NN*	OO	PP	SS	ST	TT	UU
OSP-P16	69	10	M4	4.5	3	34	26.6	10	1	8.5	26	28	20	10	11
OSP-P25	117	16	M5	5.5	3.5	52	39	19	2	9	38	40	30	16	21
OSP-P32	152	25	M6	6.6	6	68	50	28	2	13	62	60	46	40	30
OSP-P40	152	25	M6	–	6	74	56	28	2	13	62	60	46	–	30
OSP-P50	200	25	M6	–	6	79	61	28	2	13	62	60	46	–	30
OSP-P63	256	37	M8	–	8	100	76	34	3	17	80	80	65	–	37
OSP-P80	348	38	M10	–	8	122	96	42	3	16	88	90	70	–	42

* Dimension NN gives the possible plus and minus play in horizontal and vertical movement, which also makes tilting sideways possible.

Parker Hannifin Corporation
Pneumatic Division
Richland, Michigan
www.parker.com/pneumatics

Active Brake (Basic Cylinder)

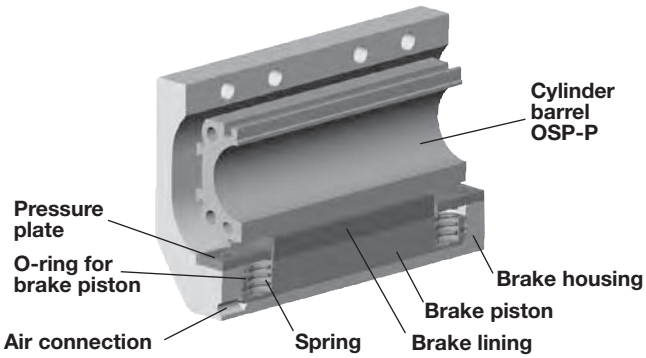

Series AB25 to 80 for basic cylinder

Features

- Actuated by pressurization
- Released by spring actuation
- Holds position, even under changing load conditions

Note:
Cannot be used in combination with intermediate supports or position sensors.

Forces and Weights (SLIDELINE Guide Required)

Series	Max. braking force (N) (1	Brake pad way (mm)	Mass (kg) Linear drive with brake 0 mm stroke	Increase per 100mm stroke	Brake*	Active brake order number
AB 25	350	2.5	1.0	0.197	0.35	**20806**
AB 32	590	2.5	2.02	0.354	0.58	**20807**
AB 40	900	2.5	2.83	0.415	0.88	**20808**
AB 50	1400	2.5	5.03	0.566	1.50	**20809**
AB 63	2170	3.0	9.45	0.925	3.04	**20810**
AB 80	4000	3.0	18.28	1.262	5.82	**20811**

(1 – at 6 bar
both chambers pressurized with 6 bar
– oil on the braking surface will reduce braking effectiveness

*** Please Note:**
The mass of the brake should be added to the total moving mass when using the cushioning diagram.

Multi-Brake

The Multi-Brake is a passive device. When the air pressure is removed the brake is actuated and movement of the cylinder is blocked. The brake is released by pressurization.

The high friction, wear resistant brake linings allow the Multi-Brake to be used as a dynamic brake to stop cylinder movement in the shortest possible time. The powerful springs also allow the Multi-Brake to be used in applications where non-precision positioning is required

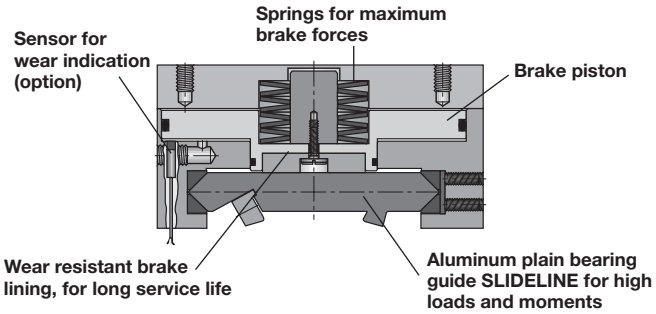

Series	Max. brake force N (lb) 1)	Mass of linear drive with guide kg (lb) With 0 mm stroke	Increase per 100 mm stroke	Mass* guide carriage kg (lb)
MB-SL 25	470 (105.7)	2.04 (5.5)	0.39 (1.0)	1.10 (2.9)
MB-SL 32	790 (177.6)	3.82 (10.2)	0.65 (1.7)	1.79 (4.8)
MB-SL 40	1200 (269.8)	5.16 (13.8)	0.78 (2.1)	2.34 (6.3)
MB-SL 50	1870 (420.4)	8.29 (22.2)	0.97 (2.6)	3.63 (9.7)
MB-SL 63	2900 (651.9)	13.31 (35.7)	1.47 (3.9)	4.97 (13.3)
MB-SL 80	2900 (651.9)	17.36 (46.5)	1.81 (4.8)	4.97 (13.3)

1) Braking surface dry – oil on the braking surface will reduce the braking force
* In the cushioning diagram, the mass of the guide carriage has to be added to the total moving mass.

Parker Hannifin Corporation
Pneumatic Division
Richland, Michigan
www.parker.com/pneumatics

End cap mountings, ø 10-80 mm

On the face of each end cap there are four threaded holes for mounting the actuator. The hole layout is square, so that the mounting can be fitted to the bottom, top or either side, regardless of the position chosen for the air connection.

Material:
Series OSP-P10 – P32: Galvanized steel.
Series OSP-P40 – P80: Anodized aluminum.

The mountings are supplied in pairs.

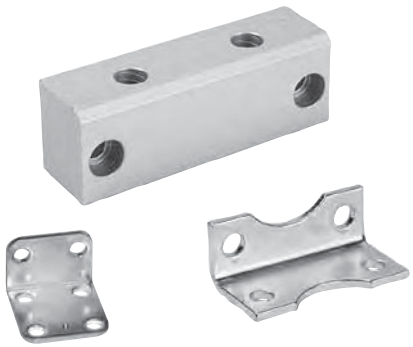

Series OSP-P16 to 32: Type A1

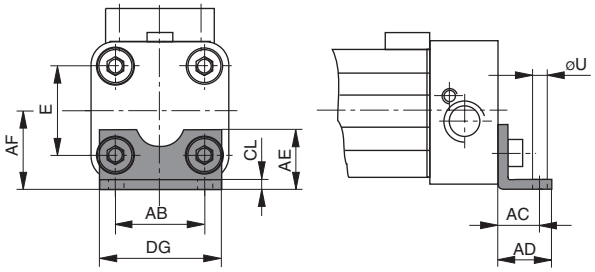

Series OSP-P40 to 80: Type C1

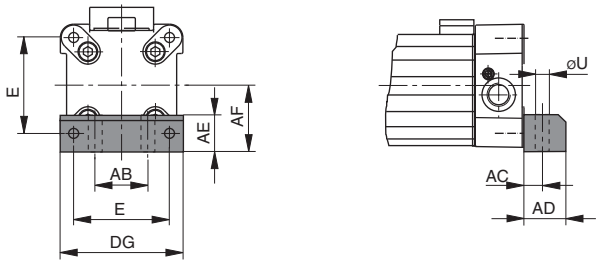

Dimensions (mm)

Series	E	ØU	AB	AC	AD	AE	AF	CL	DG
OSP-P10	—	3.6	12	10	14	20.2	11	1.6	18.4
OSP-P16	18	3.6	18	10	14	12.5	15	1.6	26
OSP-P25	27	5.8	27	16	22	18	22	2.5	39
OSP-P32	36	6.6	36	18	26	20	30	3	50
OSP-P40	54	9	30	12.5	24	24	38	—	68
OSP-P50	70	9	40	12.5	24	30	48	—	86
OSP-P63	78	11	48	15	30	40	57	—	104
OSP-P80	96	14	60	17.5	35	50	72	—	130

(*= Pair

Mounting type

Series	A1	B1	C1	D1	E1
OSP-P10	**0240**		—		
OSP-P16	**20408FIL**		—	**20434FIL**	**20435FIL**
OSP-P25	**2010**	**20311FIL**	—	**20008FIL**	**20009FIL**
OSP-P32	**3010**	**20313FIL**	—	**20157FIL**	**20158FIL**
OSP-P50	—		**5010FIL**	**20162FIL**	**20163FIL**
OSP-P63	—		**6010FIL**	**20451FIL**	**20452FIL**
OSP-P80	—		**8010FIL**	**20480FIL**	**20482FIL**

Mounting kits can be ordered via the above part numbers.
Note: Mounting kits are provided in pairs.

Parker Hannifin Corporation
Pneumatic Division
Richland, Michigan
www.parker.com/pneumatics

Intermediate supports, ø 10-80 mm

Note on types E1 and D1 (P16 – P80):

The intermediate supports can also be mounted on the underside of the actuator, in which case its distance from the center of the actuator is different.

Series OSP-10, Type E1

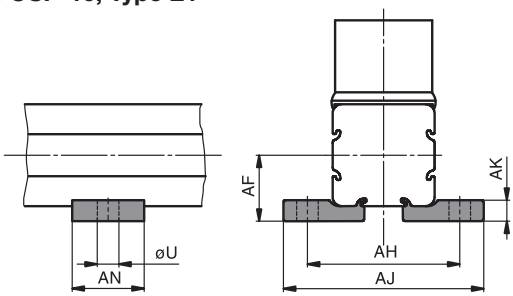

Dimensions (mm) Series OSP-P10

Series	U	AF	AH	AJ	AK	AN
OSP-P10	3.6	11	25.4	33.4	3.5	12

Series OSP-16 to 80, Type D1

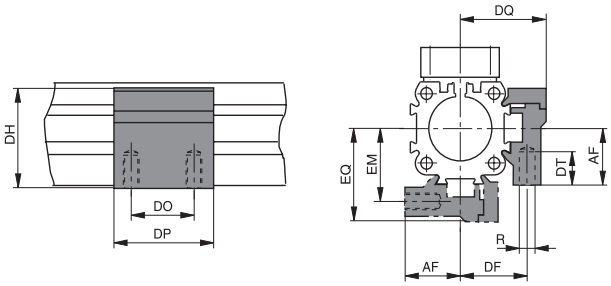

Series OSP-P16 to P80: Type E1

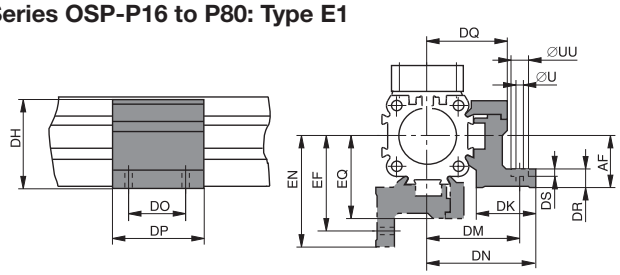

Dimension Table (mm) – Series OSP-P16 to P80

Series	R	U	UU	AF	DF	DH	DK	DM	DN	DO	DP	DQ	DR	DS	DT	EF	EM	EN	EQ
OSP-P16	M3	3.4	6	15	20	29.2	24	32	36.4	18	30	27	6	3.4	6.5	32	20	36.4	27
OSP-P25	M5	5.5	10	22	27	38	26	40	47.5	36	50	34.5	8	5.7	10	41.5	28.5	49	36
OSP-P32	M5	5.5	10	30	33	46	27	46	54.5	36	50	40.5	10	5.7	10	48.5	35.5	57	43
OSP-P40	M6	7	–	38	35	61	34	53	60	45	60	45	10	–	11	56	38	63	48
OSP-P50	M6	7	–	48	40	71	34	59	67	45	60	52	10	–	11	64	45	72	57
OSP-P63	M8	9	–	57	47.5	91	44	73	83	45	65	63	12	–	16	79	53.5	89	69
OSP-P80	M10	11	–	72	60	111.5	63	97	112	55	80	81	15	–	25	103	66	118	87

Parker Hannifin Corporation
Pneumatic Division
Richland, Michigan
www.parker.com/pneumatics

Adaptor profile, ø 16-50 mm

Adaptor profile OSP
A universal attachment for mounting of valves etc.
Solid material

Series	Order number Standard	Order number Stainless
OSP-P16	20432FIL	20438FIL
OSP-P25	20006FIL	20186FIL
OSP-P32	20006FIL	20186FIL
OSP-P40	20025FIL	20267FIL
OSP-P50	20025FIL	20267FIL

T-Slot Profile ø 16-50 mm

T-slot profile OSP
A universal attachment for mounting with standard T-Nuts

Series	Order number Standard	Order number Stainless
OSP-P16	20433FIL	20439FIL
OSP-P25	20007FIL	20187FIL
OSP-P32	20007FIL	20187FIL
OSP-P40	20026FIL	20268FIL
OSP-P50	20026FIL	20268FIL

Note: Can be used in conjunction with IPS T-nut (20-058).

Combination of Series OSP-P with system profiles

Connection profile, ø 16-50 mm

For combining
Series OSP-P with system profiles
Series OSP-P with Series OSP-P

Series	Order number
OSP-P16	20849FIL
OSP-P25	20850FIL
OSP-P32	20850FIL
OSP-P40	20851FIL
OSP-P50	20851FIL

Combination of Series OSP-P with Series OSP-P

Parker Hannifin Corporation
Pneumatic Division
Richland, Michigan
www.parker.com/pneumatics

Other Options

PROLINE
The compact aluminum roller guide for high loads and velocities and utilizes the GDL Guide Bearing

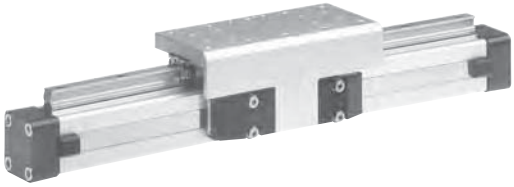

STARLINE
Recirculating ball bearing guide for very high loads and precision

KF Guide
Recirculating ball bearing guide – the mounting dimensions correspond to FESTO Type: DGPL-KF

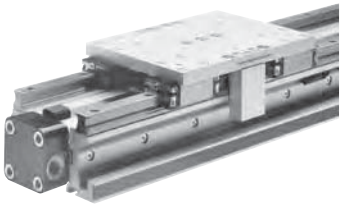

Heavy Duty Guide HD
for heavy duty applications

Integrated VOE Valves

SENSOFLEX SFI-plus
Incremental measuring system with 0.1 (1.0) mm resolution

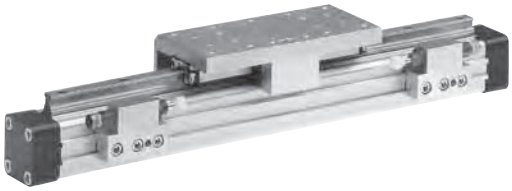

Variable Stop VS
The variable stop provides simple stroke limitation
Available on STARLINE only

Clean Room Version
Certified to DIN EN ISO 14644-1

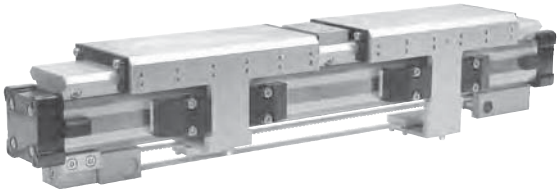

Rodless Cylinder
For synchronized bi-parting movements
Available on SLIDELINE Guide Bearing only

Parker Hannifin Corporation
Pneumatic Division
Richland, Michigan
www.parker.com/pneumatics

Service packs

	Bore sizes						
	16mm	25mm	32mm	40mm	50mm	63mm	80mm
BUNA service pack single piston	**11111xssssss**	**11112xssssss**	**11113xssssss**	**11114xssssss**	**11115xssssss**	**11116xssssss**	**11118xssssss**
Fluorocarbon service pack single piston	**11121xssssss**	**11122xssssss**	**11123xssssss**	**11124xssssss**	**11125xssssss**	**11126xssssss**	**11128xssssss**
BUNA service pack single piston - slow speed grease	**11131xssssss**	**11132xssssss**	**11133xssssss**	**11134xssssss**	**11135xssssss**	**11136xssssss**	**11138xssssss**
Fluorocarbon service pack single piston - slow speed grease	**11141xssssss**	**11142xssssss**	**11143xssssss**	**11144xssssss**	**11145xssssss**	**11146xssssss**	**11148xssssss**

Note: sssss = stroke of cylinder

Service Pack Information

Service Packs contain all the components necessary to completely rebuild a Parker rodless cylinder, are available. Each pack contains a complete seal kit, inner and outer bands, Parker grease tube, cleaning tool and repair instructions. It's all packaged in an easy-to-ship, easy-to-store box clearly labeled to indicate the cylinder type, bore and stroke for which it is intended. Contact your local Parker distributor for more information.

Seal kits

	Bore sizes						
	16mm	25mm	32mm	40mm	50mm	63mm	80mm
BUNA seal kit - standard cylinder	**11052**	**11053**	**11054**	**11055**	**11056**	**11057**	**11058**
Fluorocarbon seal kit - standard cylinder	**11059**	**11060**	**11061**	**11062**	**11063**	**11064**	**11065**
Seal kit - sideline carriage	**11066**	**11067**	**11068**	**11069**	**11070**	—	—
Seal kit active brake - standard cylinder	—	**11822FIL**	**11823FIL**	**11824FIL**	**11825FIL**	**11826FIL**	**11827FIL**
Seal kit - multibrake	—	**11089FIL**	**11090FIL**	**11091FIL**	**11092FIL**	**11093FIL**	—

Seal Kit Information

Seal Kits include all seals, a tube of grease, bearing shoe, scraper and cleaning tool.

Parker Hannifin Corporation
Pneumatic Division
Richland, Michigan
www.parker.com/pneumatics

P1X Series

- 7 bore sizes – 16mm through 63mm
- Two port locations standard
- Large carriage for stability
- Integral sensor mounting rail
- Optional adjustable stroke and shock absorbers

Operating information

Maximum pressure:	100 PSIG (7 bar)	
Minimum pressure:	Ø16, Ø20 bores	29 PSI (2 bar)
	Ø25, Ø32, Ø40 bores	14.5 PSI (1 bar)
	Ø50, Ø63 bores	7 PSI (0.5 bar)
Proof pressure:	152 PSI (10.5 bar)	
Temperature range:	40°F to 140°F (5°C to 60°C)	
Filtration requirements:	Filtered, nonlubricated compressed air	

Ordering Information

P1X N 032 D A N 0500 W D N N N -B

Series

P1X	Global Rodless

Construction

N	Inch
M	Metric

Bore size

016	16mm
020	20mm
025	25mm
032	32mm
040	40mm
050	50mm
063	63mm

Carriage

D	Double acting

Piston / Shock style

A	Cushions both ends (standard)
R	Cushion right end only*
L	Cushion left end only*
N	No cushions or shock absorbers
H	Shock absorber both ends**
B	Shock absorber right end only**
C	Shock absorber left end only**

* As viewed from port side of cylinder
** Cannot be combined with inverted carriage

Seal material

N	Standard

Stroke length*

Basic or options

B†	Standard
W†	With options
/	Special (for factory use only)

Carriage mounting style

D	Basic mount
J	Inverted basic mount
A	Swivel mount
G	Inverted swivel mount

Porting options

N	NPTF (Std)
G	BSPP
Q	BSPT*

* Not available with N construction

Mounting options

No Foot mount	End mount foot bracket	Bottom mount foot bracket	Intermediate supports
N (std)	F	A††	No support
H	M	B††	One support
K	P	C††	Two supports
T	R	D††	Three supports

Fastener Type

N	Standard - zinc-plated
S	Stainless steel

* Stroke is ALWAYS in mm.
† When "B" is specified, the remaining digits in the part number are not necessary. If "W" is used, the remaining digits in the part number must be filled out.
†† Not available on 40, 50 and 63mm bore sizes.

Essential Information
Optional Features

Sensors
For sensors see page B339.

Parker Hannifin Corporation
Pneumatic Division
Richland, Michigan
www.parker.com/pneumatics

Specifications

Model	P1X (Standard w/switch)			
Bore size mm (inch nominal)	16 (5/8)	20 (3/4), 25 (1)	32 (1-1/4), 40 (1-1/2)	50 (2), 63 (21/2)
Port size – N series	M5 (10-32)	1/8 NPT	1/4 NPT	3/8 NPT
Port size – M series	M5 (10-32)	1/8 Rc	1/4 Rc	3/8 Rc
Stroke tolerance in.	±0.080 to 39"	±0.100 to 118"	±0.120 to 196"	
Piston speed, *in./sec.	2-80 IPS with side ports on each end (Ø16 & Ø20 bores 2-40 IPS with single end porting with 39" stroke) (Ø25, Ø32, Ø40, Ø50 & Ø63 bores 2-40 IPS with single end porting with 78" stroke)			
Cushion	Air cushion standard			
Lubrication	Not required (if you choose to lubricate your system, continuing lubrication will be required.)			

*Actual piston speed with one end port will vary depending on stroke length.

Weight & theoretical force characteristics

		Weights								Theoretical force (lbs)				
		Weight at zero stroke						Weight per 1" (25.4mm) stroke		At pressure (PSI)				
	Area	M00		MLB		MLB1								
Bore	in²	lbs	kg	lbs	kg	lbs	kg	lbs	kg	30	40	60	80	100
16	0.31	0.70	0.3	0.73	0.3	0.77	0.4	0.07	0.03	9	12	19	25	31
20	0.49	1.15	0.5	1.19	0.5	1.28	0.6	0.10	0.04	15	20	29	39	49
25	0.84	2.21	1.0	2.43	1.1	2.43	1.1	0.15	0.07	23	30	46	61	76
32	1.26	3.31	1.5	3.53	1.6	3.75	1.7	0.20	0.09	38	50	69	100	125
40	1.96	5.29	2.4	5.51	2.5	—	—	0.27	0.12	59	78	117	156	195
50	3.08	7.94	3.6	8.16	3.7	—	—	0.40	0.18	91	122	182	243	304
63	4.86	13.67	6.2	14.33	6.5	—	—	0.63	0.28	145	193	290	386	483

Moments

Figure 1 shows the maximum allowable moments for each of the three types of loading: pitch, roll and yaw.

The sum total of each of these types of moments, divided by each of the maximum values, determines a Load-Moment Factor (LMF) should be equal to or less than 1.0. On horizontal mountings, the total load (L) should also be divided by the maximum load allowable (Figure 2) and factored into the equation.

Horizontal mountings:

$$\frac{L}{[L]} + \frac{M}{[M]} + \frac{Ms}{[Ms]} + \frac{Mv}{[Mv]} = LMF \leq 1.0$$

Vertical mountings:

$$\frac{M}{[M]} + \frac{Ms}{[Ms]} + \frac{Mv}{[Mv]} = LMF \leq 1.0$$

Figure 1

Maximum allowable moments n-m (lb-in)

Bore size	[M] Pitch moment Std.	[M] Pitch moment Inverted	[Ms] Roll moment Std.	[Ms] Roll moment Inverted	[Mv] Yaw moment Std.	[Mv] Yaw moment Inverted
16	5 (44)	3.5 (31)	1 (9)	0.5 (4)	1 (9)	1 (9)
20	10 (89)	7 (62)	1.5 (13)	0.7 (6)	3 (27)	3 (27)
25	17 (150)	12 (106)	5 (44)	2.5 (22)	10 (89)	10 (89)
32	36 (319)	25 (221)	10 (89)	5 (44)	21 (186)	21 (186)
40	77 (682)	54 (478)	23 (204)	11.5 (102)	26 (230)	26 (230)
50	154 (1363)	108 (956)	32 (283)	16 (142)	42 (372)	42 (372)
63	275 (2434)	193 (1708)	52 (460)	26 (230)	76 (673)	76 (673)

Figure 2

Bore size	Max. allowable load [L] N (lbs) Std.	Max. allowable load [L] N (lbs) Inverted	Max. unsupported length mm (in) at max. load
16	141 (32)	70 (16)	450 (17.7)
20	198 (45)	101 (23)	551 (21.7)
25	356 (81)	180 (41)	899 (35.4)
32	616 (140)	308 (70)	749 (29.5)
40	959 (218)	480 (109)	1000 (39.4)
50	1456 (331)	726 (165)	1300 (51.2)
63	2297 (522)	1148 (261)	1600 (63.0)

Parker Hannifin Corporation
Pneumatic Division
Richland, Michigan
www.parker.com/pneumatics

Basic cylinder

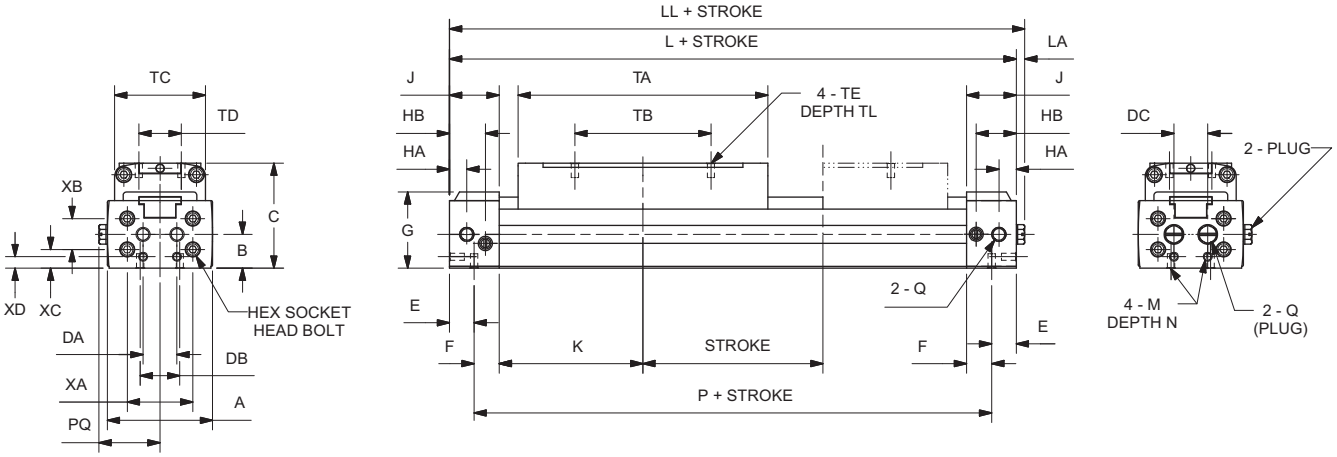

Bore (mm)	A	B	C	DA	DB	DC	E	F	G	HA	HB	J	K	L	LL	LA	M	N
16	1.46 (37)	0.47 (12)	1.46 (37)	0.47 (12)	0.55 (14)	0.47 (12)	0.34 (8.5)	0.35 (9)	1.06 (27)	0.24 (6)	0.55 (14)	0.69 (17.5)	2.24 (57)	5.87 (149)	5.98 (152)	0.12 (3)	5-40 (M3)	0.20 (5)
20	1.73 (44)	0.55 (14)	1.65 (42)	0.55 (14)	0.63 (16)	0.63 (16)	0.41 (10.5)	0.45 (11.5)	1.22 (31)	0.34 (8.5)	0.73 (18.5)	0.87 (22)	2.46 (62.5)	6.65 (169)	6.75 (171.5)	0.10 (2.5)	8-32 (M4)	0.26 (6.5)

Bore (mm)	P	PQ	Q	TA	TB	TC	TD	TE	TL	XA	XB	XC	XD
16	5.20 (132)	0.83 (21)	10-32 NPT (M5)	3.47 (88)	1.89 (48)	1.26 (32)	0.59 (15)	5-40 (M3)	0.20 (5)	0.91 (23)	0.43 (11)	0.26 (6.5)	0.16 (4)
20	5.83 (148)	0.97 (24.5)	1/8 NPT (1/8 Rc)	3.94 (100)	2.36 (60)	1.50 (38)	0.71 (18)	8-32 (M4)	0.24 (6)	1.10 (28)	0.63 (16)	0.24 (6)	0.20 (5)

inches (mm)

Sensor adapter bracket

Part number P8S-TMA0Y
(Shown larger than actual size)

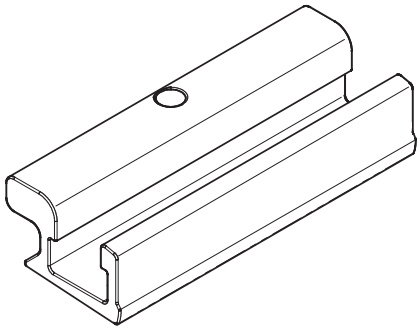

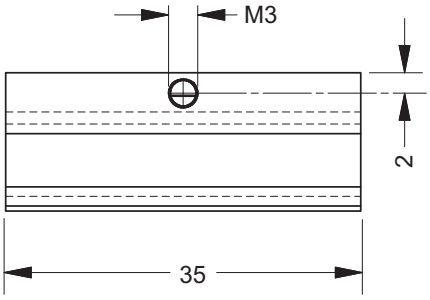

NOTE: Must be ordered separately when ordering sensors.

Parker Hannifin Corporation
Pneumatic Division
Richland, Michigan
www.parker.com/pneumatics

Basic cylinder

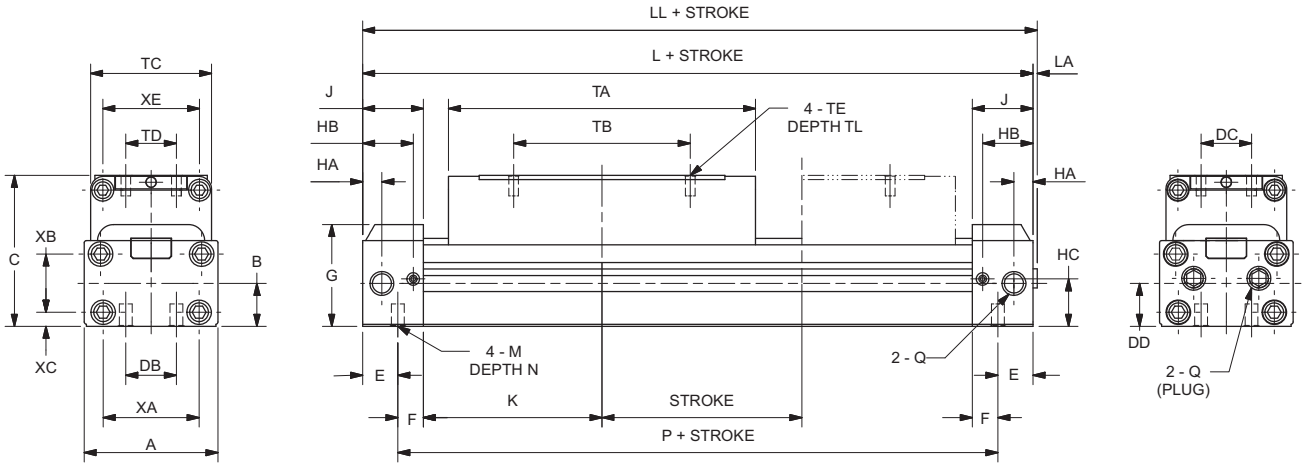

Bore (mm)	A	B	C	DB	DC	DD	E	F	G	HA	HB	HC	J	K	L	LL	LA	M	N
25	2.09 (53)	0.67 (17)	2.09 (53)	0.79 (20)	1.02 (26)	0.75 (19)	0.55 (14)	0.39 (10)	1.59 (40.5)	0.30 (7.5)	0.79 (20)	0.74 (18.9)	0.95 (24)	2.80 (71)	7.48 (190)	7.56 (192)	0.08 (2)	1/4-20 (M6)	0.35 (9)
32	2.60 (66)	0.73 (18.5)	2.24 (57)	1.26 (32)	1.06 (27)	0.83 (21)	0.59 (15)	0.51 (13)	1.71 (43.5)	0.39 (10)	0.93 (23.5)	0.85 (21.5)	1.10 (28)	3.35 (85)	8.90 (226)	9.00 (228.5)	0.10 (2.5)	1/4-20 (M6)	0.35 (9)
40	3.15 (80)	0.87 (22)	2.64 (67)	1.42 (36)	1.38 (35)	1.10 (28)	0.67 (17)	0.55 (14)	2.03 (51.5)	0.51 (13)	1.02 (26)	1.06 (27)	1.22 (31)	3.58 (91)	9.61 (244)	9.71 (246.5)	0.10 (2.5)	5/16-18 (M8)	0.47 (12)
50	3.78 (96)	1.10 (28)	3.23 (82)	1.77 (45)	1.38 (35)	1.38 (35)	0.91 (23)	0.63 (16)	2.40 (61)	0.59 (15)	1.30 (33)	1.39 (35.3)	1.54 (39)	3.54 (90)	10.16 (258)	10.26 (260.5)	0.10 (2.5)	5/16-18 (M8)	0.47 (12)
63	4.65 (118)	1.38 (35)	3.74 (95)	1.97 (50)	1.54 (39)	1.65 (42)	0.75 (19)	0.79 (20)	2.91 (74)	0.59 (15)	1.26 (32)	1.69 (43)	1.54 (39)	4.29 (109)	11.65 (296)	11.75 (298.5)	0.10 (2.5)	3/8-16 (M10)	0.59 (15)

Bore (mm)	P	Q	TA	TB	TC	TD	TE	TL	XA	XB	XC	XE
25	6.38 (162)	1/8 NPT (1/8 Rc)	4.80 (122)	2.76 (70)	1.89 (48)	0.79 (20)	10-24 (M5)	0.32 (8)	1.50 (38)	0.91 (23)	0.22 (5.5)	1.58 (40)
32	7.72 (196)	1/4 NPT (1/4 Rc)	5.28 (134)	3.15 (80)	2.21 (56)	0.79 (20)	1/4-20 (M6)	0.35 (9)	1.89 (48)	0.98 (25)	0.24 (6)	1.85 (47)
40	8.27 (210)	1/4 NPT (1/4 Rc)	5.83 (148)	3.54 (90)	2.68 (68)	1.18 (30)	1/4-20 (M6)	0.43 (11)	2.36 (60)	1.18 (30)	0.28 (7)	2.28 (58)
50	8.35 (212)	3/8 NPT (3/8 Rc)	5.98 (152)	3.94 (100)	3.15 (80)	1.18 (30)	5/16-18 (M8)	0.51 (13)	2.91 (74)	1.42 (36)	0.39 (10)	2.76 (70)
63	10.16 (258)	3/8 NPT (3/8 Rc)	6.61 (168)	4.33 (110)	4.02 (102)	1.58 (40)	5/16-18 (M8)	0.51 (13)	3.78 (96)	1.65 (42)	0.55 (14)	3.54 (90)

inches (mm)

Parker Hannifin Corporation
Pneumatic Division
Richland, Michigan
www.parker.com/pneumatics

16 to 32 mm bore sizes

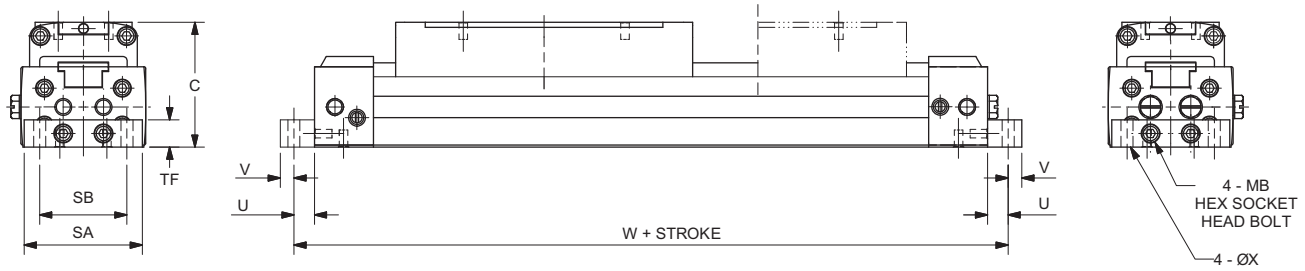

40 to 63 mm bore sizes

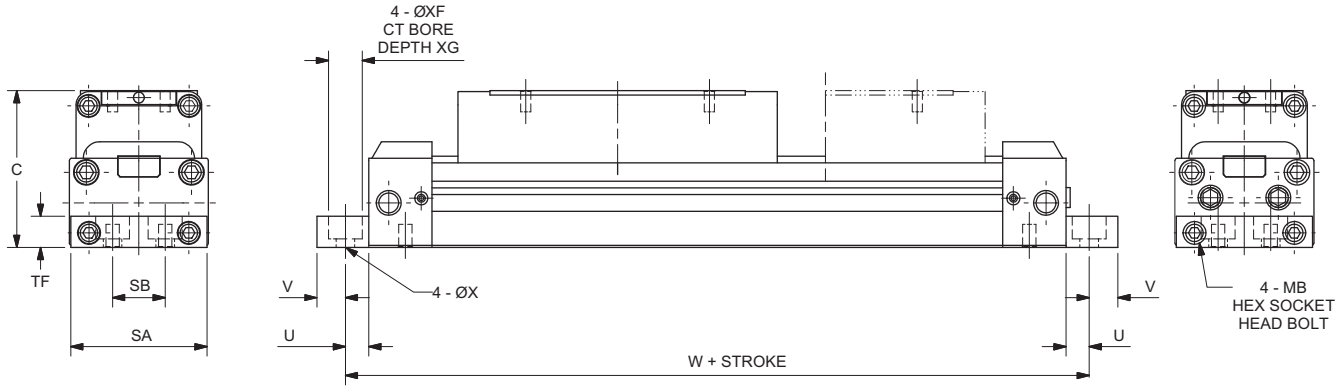

Bore (mm)	C	SA	SB	TF	U	V	W	X	XF	XG	MB
16	1.46 (37)	1.38 (35)	1.02 (26)	0.32 (8)	0.24 (6)	0.16 (4)	6.34 (161)	0.14 (3.6)	—	—	M3x10
20	1.65 (42)	1.69 (43)	1.30 (33)	0.39 (10)	0.24 (6)	0.24 (6)	7.13 (181)	0.19 (4.7)	—	—	M4x12
25	2.09 (53)	2.05 (52)	0.79 (20)	0.47 (12)	0.35 (9)	0.43 (11)	8.19 (208)	0.28 (7)	—	—	M5x50
32	2.24 (57)	2.52 (64)	1.26 (32)	0.47 (12)	0.35 (9)	0.43 (11)	9.61 (244)	0.28 (7)	—	—	M5x50
40	2.64 (67)	3.15 (80)	1.18 (30)	0.59 (15)	0.49 (12.5)	0.45 (11.5)	10.60 (269)	0.35 (9)	0.51 (13)	0.34 (8.7)	M6x55
50	3.23 (82)	3.70 (94)	1.57 (40)	0.79 (20)	0.49 (12.5)	0.45 (11.5)	11.10 (283)	0.35 (9)	0.51 (13)	0.34 (8.7_	M8x65
63	3.74 (95)	4.57 (116)	1.89 (48)	0.98 (25)	0.59 (15)	0.59 (15)	12.80 (326)	0.43 (11)	0.61 (15.5)	0.41 (10.5)	M8x70

inches (mm)

Parker Hannifin Corporation
Pneumatic Division
Richland, Michigan
www.parker.com/pneumatics

16 to 20 mm bore sizes

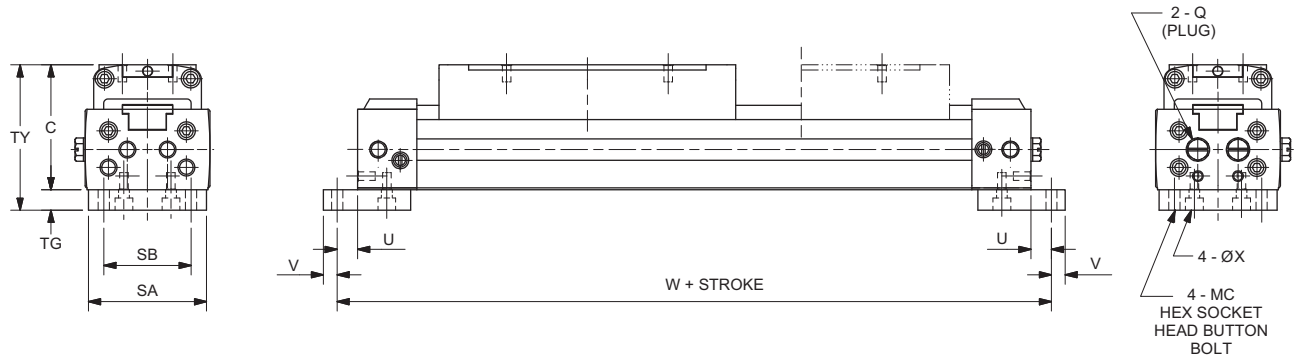

25 to 32 mm bore sizes

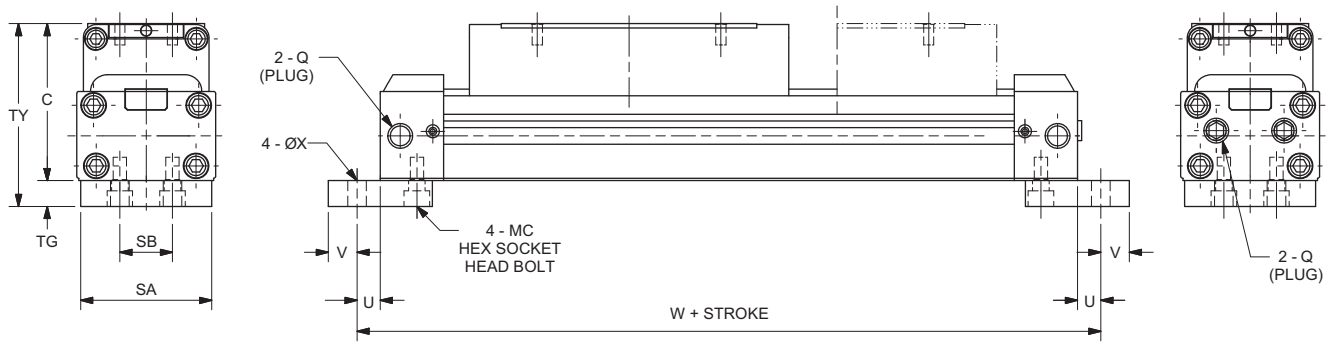

Bore (mm)	C	Q	SA	SB	TG	TY	U	V	W	X	MC
16	1.46 (37)	10-32 (M5)	1.38 (35)	1.02 (26)	0.24 (6)	1.69 (43)	0.24 (6)	0.16 (4)	6.34 (161)	0.13 (3.4)	5-40, 1/4 LG
20	1.65 (42)	1/8 NPT (1/8 Rc)	1.69 (43)	1.30 (33)	0.32 (8)	1.97 (50)	0.24 (6)	0.24 (6)	7.13 (181)	0.18 (4.5)	8-32, 3/8 LG
25	2.09 (53)	1/8 NPT (1/8 Rc)	1.97 (50)	0.79 (20)	0.39 (10)	2.48 (63)	0.35 (9)	0.43 (11)	8.19 (208)	0.28 (7)	1/4-20 x 1/2 LG
32	2.24 (57)	1/4 NPT (1/4 Rc)	2.52 (64)	1.26 (32)	0.39 (10)	2.64 (67)	0.35 (9)	0.43 (11)	9.61 (244)	0.28 (7)	1/4-20 x 1/2 LG
40	2.64 (67)	1/4 NPT (1/4 Rc)	—	—	—	—	—	—	—	—	—
50	3.23 (82)	3/8 NPT (3/8 Rc)	—	—	—	—	—	—	—	—	—
63	3.74 (95)	3/8 NPT (3/8 Rc)	—	—	—	—	—	—	—	—	—

inches (mm)

Parker Hannifin Corporation
Pneumatic Division
Richland, Michigan
www.parker.com/pneumatics

Intermediate support brackets

End mount

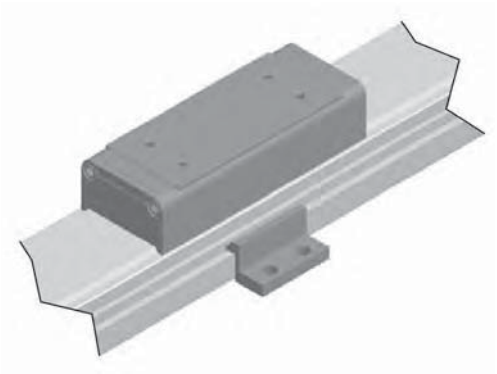

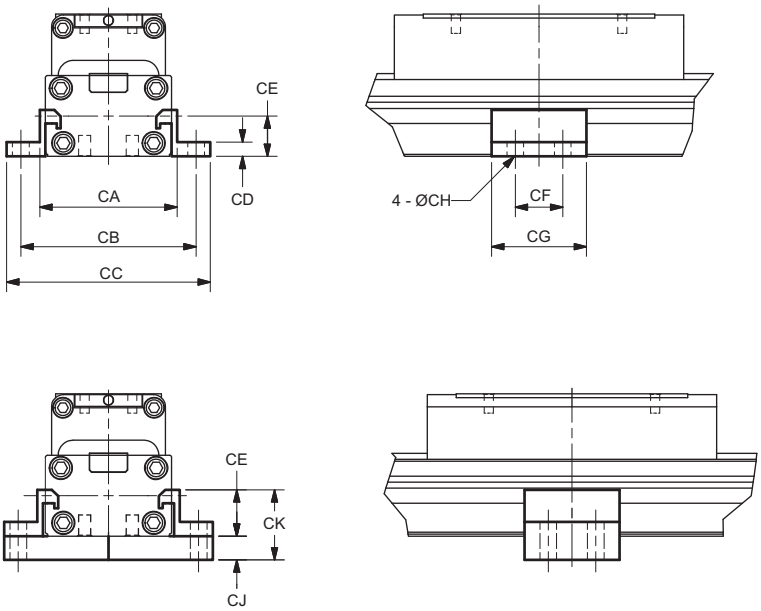

Intermediate support brackets (2 per kit)

Bore (mm)	CA	CB	CC	CD	CE	CF	CG	CH
16	1.654 (42)	2.205 (56)	2.52 (64)	0.118 (3)	0.472 (12)	0.787 (20)	1.378 (35)	0.157 (4)
20	1.929 (49)	2.52 (64)	2.953 (75)	0.157 (4)	0.551 (14)	0.787 (20)	1.496 (38)	0.197 (5)
25	2.362 (60)	2.992 (76)	3.465 (88)	0.236 (6)	0.768 (19.5)	0.787 (20)	1.575 (40)	0.276 (7)
32	2.913 (74)	3.465 (88)	3.937 (100)	0.236 (6)	0.846 (21.5)	0.787 (20)	1.575 (40)	0.276 (7)
40	3.543 (90)	4.252 (108)	4.882 (124)	0.236 (6)	0.965 (24.5)	1.181 (30)	2.362 (60)	0.354 (9)
50	4.173 (106)	4.882 (124)	5.512 (140)	0.315 (8)	1.201 (30.5)	1.181 (30)	2.362 (60)	0.354 (9)
63	5.118 (130)	5.984 (152)	6.772 (172)	0.394 (10)	1.516 (38.5)	1.969 (50)	3.543 (90)	0.433 (11)

Bore (mm)	CJ	CK	Kit part number: End mount or no mount	Kit part number: Bottom mount
16	0.236 (6)	0.709 (18)	**L080180016**	**L080190016**
20	0.315 (8)	0.866 (22)	**L080180020**	**L080190020**
25	0.394 (10)	1.161 (29.5)	**L080180025**	**L080190025**
32	0.394 (10)	1.24 (31.5)	**L080180032**	**L080190032**
40	—	—	**L080180040**	
50	—	—	**L080180050**	
63	—	—	**L080180063**	

inches (mm)

Parker Hannifin Corporation
Pneumatic Division
Richland, Michigan
www.parker.com/pneumatics

Swivel mount

Absorbs misalignment between cylinder and load

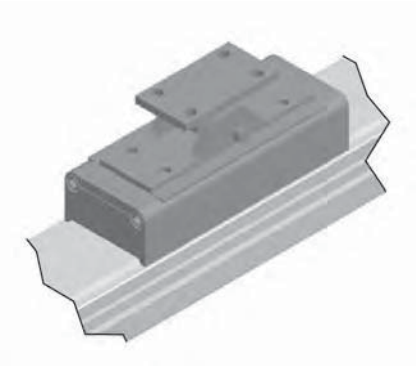

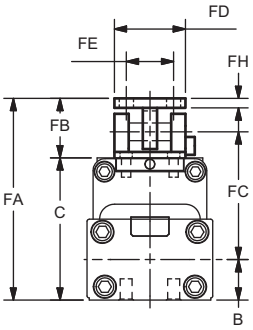

FJ dimension is the maximum horizontal float

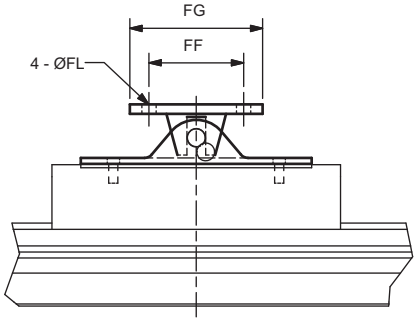

FK dimension is the maximum vertical float

Swivel mounts

Bore (mm)	FA	FB	FC	FD	FE	FF	FG	FH
16	2.238 (58)	0.827 (21)	1.339 (34)	0.945 (24)	0.673 (16)	1.181 (30)	1.575 (40)	0.118 (3)
20	2.638 (67)	0.984 (25)	1.535 (39)	1.181 (30)	0.787 (20)	1.575 (40)	2.205 (56)	0.157 (4)
25	3.071 (78)	0.984 (25)	1.85 (47)	1.181 (30)	0.787 (20)	1.575 (40)	2.205 (56)	0.157 (4)
32	3.74 (95)	1.496 (38)	2.185 (55.5)	1.772 (45)	1.181 (30)	1.969 (50)	2.756 (70)	0.236 (6)
40	4.134 (105)	1.496 (38)	2.441 (62)	1.772 (45)	1.181 (30)	1.969 (50)	2.756 (70)	0.236 (6)
50	4.961 (126)	1.732 (44)	2.874 (73)	2.362 (60)	1.575 (40)	2.756 (70)	3.543 (90)	0.315 (8)
63	5.472 (139)	1.732 (44)	3.11 (79)	2.362 (60)	1.575 (40)	2.756 (70)	3.543 (90)	0.315 (8)

inches (mm)

Bore (mm)		FJ	FK	FL	B	C	Part number
16	inches	0.118	0.118	0.134	0.472	1.457	**L078930016**
	mm	3	3	3.4	12	37	
20	inches	0.118	0.118	0.177	0.551	1.654	**L080160020**
	mm	3	3	4.5	14	42	**L08016M020**
25	inches	0.118	0.118	0.236	0.669	2.087	**L080160025**
	mm	3	3	6	17	53	**L08016M025**
32	inches	0.197	0.197	0.276	0.728	2.244	**L080160032**
	mm	5	5	7	18.5	57	**L08016M032**
40	inches	0.197	0.197	0.276	0.866	2.638	**L080160040**
	mm	5	5	7	22	67	**L08016M040**
50	inches	0.197	0.197	0.354	1.102	3.228	**L080160050**
	mm	5	5	9	28	82	**L08016M050**
63	inches	0.197	0.197	0.354	1.378	3.74	**L080160063**
	mm	5	5	9	35	95	**L08016M063**

Parker Hannifin Corporation
Pneumatic Division
Richland, Michigan
www.parker.com/pneumatics

Inverted mount

Provides mounting surface 180° from carriage

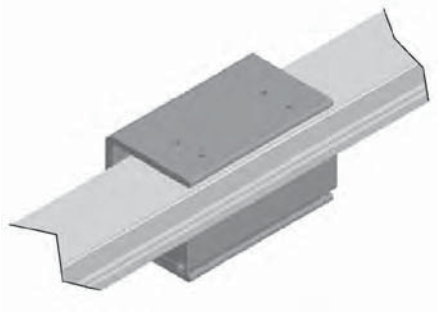

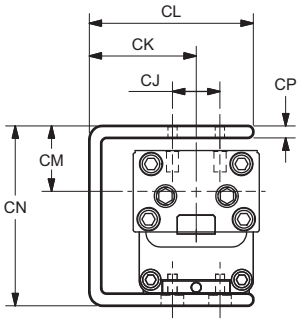

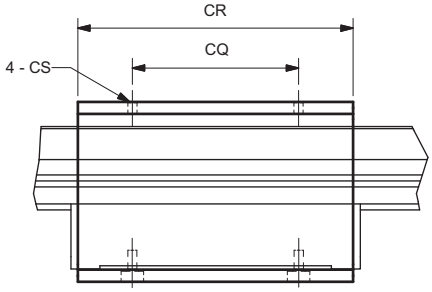

Inverted mounts*

Bore (mm)		CJ	CK	CL	CM	CN	CP	CQ	CR	CS	Part number**
16	inches	0.591	1.398	1.969	1.142	2.362	0.236	1.89	3.465	5-40	**L080170016**
	mm	15	35.5	50	29	60	6	48	88		**L08017M016**
20	inches	0.709	1.28	1.969	1.024	2.362	0.236	2.362	3.937	8-32	**L080170020**
	mm	18	32.5	50	26	60	6	60	100		**L08017M020**
25	inches	0.787	1.772	2.717	1.181	2.795	0.197	2.756	4.567	10-24	**L080170025**
	mm	20	45	69	30.0	71	5	70	116		**L08017M025**
32	inches	0.787	2.126	3.209	1.358	3.15	0.276	3.15	5.039	1/4-20	**L080170032**
	mm	20	54	81.5	34.5	80	7	80	128		**L08017M032**
40	inches	1.181	2.48	3.76	1.516	3.602	0.315	3.543	5.433	1/4-20	**L080170040**
	mm	30	63	95.5	38.5	91.5	8	90	138		**L08017M040**
50	inches	1.181	2.913	4.449	1.909	4.429	0.394	3.937	5.591	5/16-18	**L080170050**
	mm	30	74	113	48.5	112.5	10	100	142		**L08017M050**
63	inches	1.575	3.465	5.433	2.283	5.157	0.512	4.331	6.22	5/16-18	**L080170063**
	mm	40	88	138	58	131	13	110	158		**L08017M063**

*Inverted mounts not available with adjustable stroke, shock absorber or tube center support bracket.
**Use this part number when ordering as a separate part. When ordering with cylinder, use "C" option as part of cylinder part number.

End port piping

Refer to Figure 3 to determine when end port piping can be used with various types of mountings relative to fitting clearance.

On all bore sizes with foot mounting, the end port pipe fittings will obstruct the mounting holes. To avoid this problem, mount the cylinder first and tighten the mounting bolts and then attach the pipe fittings to the cylinder ports.

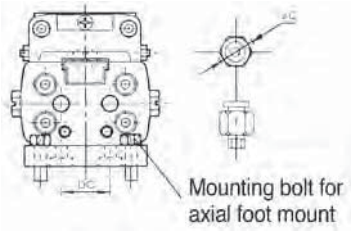

Figure 3

Bore (mm)	øC [O.D. of fittings - mm (in.)] No mount	End mount	Bottom mount
16	12 (0.472)	End Port Piping Not Available	12 (0.472)
20	16 (0.630)		16 (0.630)
25	26 (1.024)		26 (1.024)
32	27 (1.065)		27 (1.063)
40	35 (1.378)	26 (1.024)	
50	35 (1.378)	30 (1.181)	
63	39 (1.535)	34 (1.339)	

Parker Hannifin Corporation
Pneumatic Division
Richland, Michigan
www.parker.com/pneumatics

Shock absorber specifications

Cylinder	16mm	20mm	25mm	32mm	40mm	50, 63mm
Shock absorber number	**0887790016**	**0887790020**	**0887790025**	**0887790032**	**0887790040**	**0887790050**
Max. energy absorption - in-lbs (kgf·m)	26.0 (0.3)	60.8 (0.7)	104.2 (1.2)	226 (2.6)	608 (7.0)	1042 (12)
Stroke - inches	0.236	0.315	0.394	0.590	0.787	0.984
Energy absorption / hour - in.-lbs / hour	54,700	109,380	187,510	338,560	729,200	750,000
Max. impact velocity - in. / sec.	59	59	78.7	78.7	98.4	118.1
Max. cycle rate per hour	2100	1800	1800	1500	1200	720
Ambient temperature - °F (°C)	41-140 (5-60)					
Spring return force - lb. Extended Compressed	0.65 1.01	0.45 0.97	0.65 1.33	1.33 2.65	2.20 4.86	3.60 7.49
Return time - Sec.	0.3	0.3	0.3	0.3	0.4	0.4

Performance data (16 to 32mm bores)

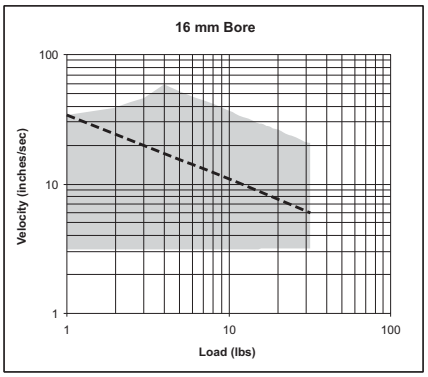

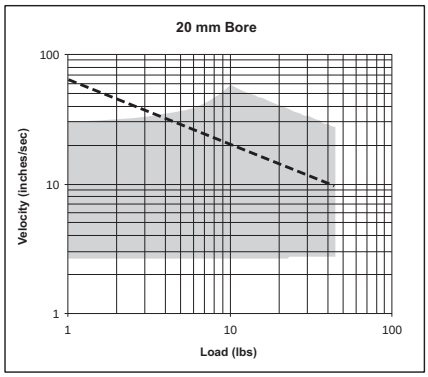

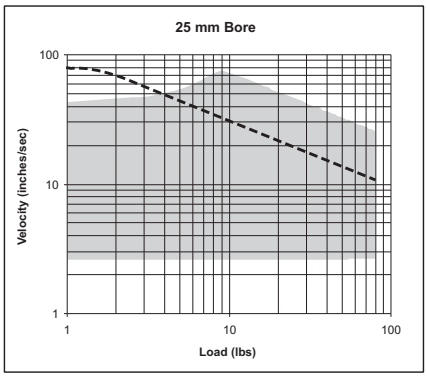

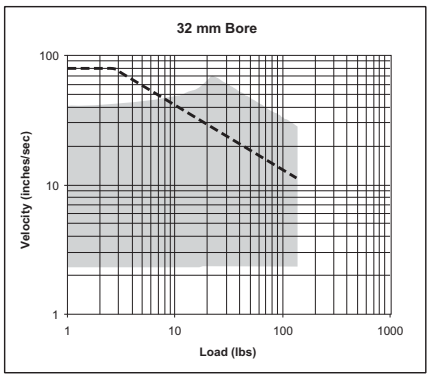

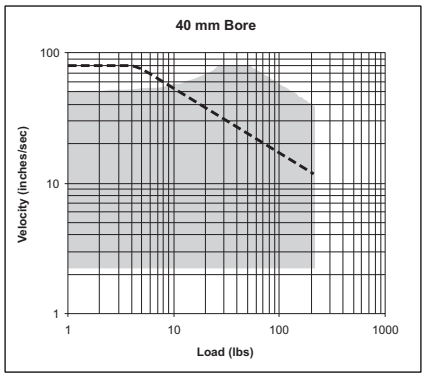

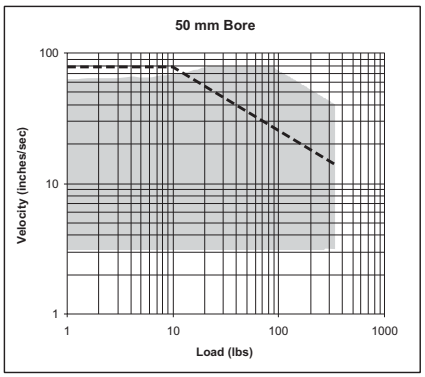

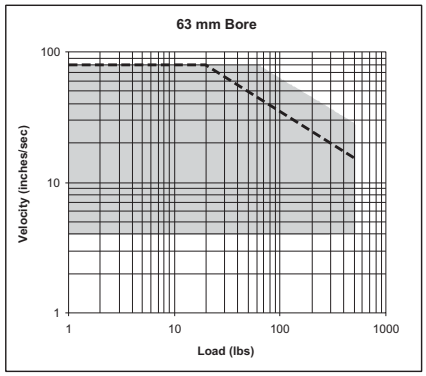

- - - - Air Cushion w/back pressure (flow controls or other meter out device)

Shock Absorber

Notes: 1. If the cylinder is vertical in orientation, double the total load for bottom shock absorber.
2. Use the total load that is being moved by shock absorber. If a weight transfer application, this would include La.
3. If final velocity cannot be easily determined, use two times the stroke divided by the stroke time.

Parker Hannifin Corporation
Pneumatic Division
Richland, Michigan
www.parker.com/pneumatics

16 to 25 mm bore sizes

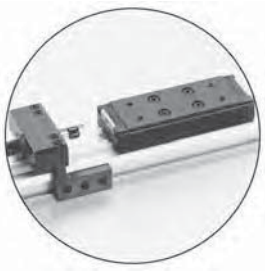

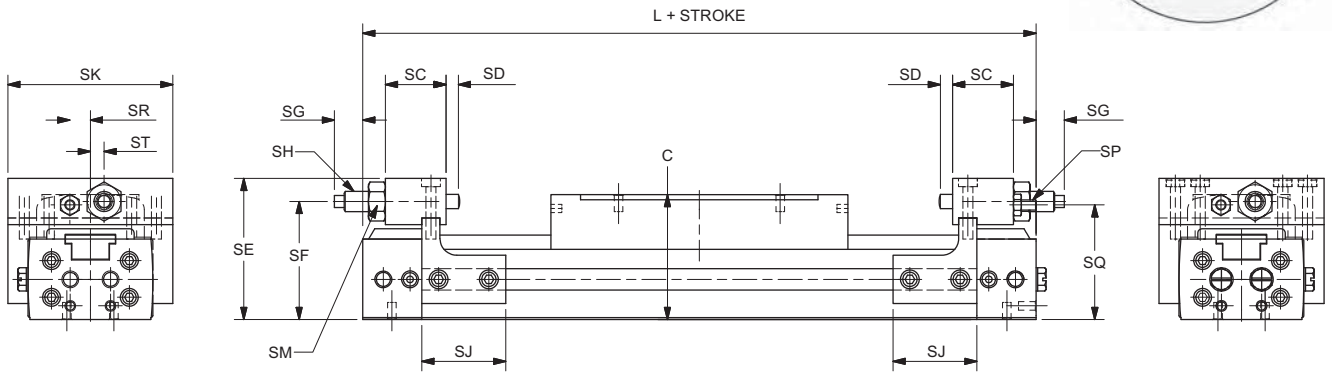

Bore (mm)	SC	SD	SE	SF	SG Max	SG Min	SH in-lbs	SJ	SK	SP	SQ	SR	ST	C	L
16	0.71 (18)	0.16 (4)	1.65 (42)	1.38 (35)	0.57 (14.5)	0.18 (4.5)	26	0.98 (25)	1.93 (49)	M3	1.34 (34)	0.24 (6)	0.16 (4)	1.46 (37)	5.87 (149)
20	0.89 (22.5)	0.14 (3.5)	1.89 (48)	1.57 (40)	0.57 (14.5)	0.18 (4.5)	61	1.54 (39)	2.24 (57)	M4	1.50 (38)	0.32 (8)	0.20 (5)	1.65 (42)	6.65 (169)
25	0.79 (20)	0.10 (2.5)	2.46 (62.5)	2.03 (51.5)	0.57 (14.5)	0.18 (4.5)	104	1.97 (50)	3.03 (77)	M6	1.97 (50)	0.47 (12)	0.39 (10)	2.09 (53)	7.48 (190)

inches (mm)
SH = max. energy absorption

32 to 63 mm bore sizes

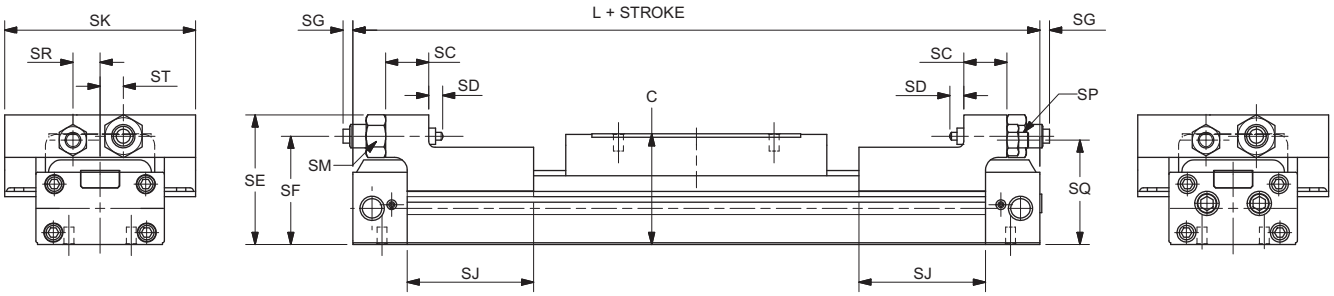

Bore (mm)	SC	SD	SE	SF	SG Max	SG Min	SH in-lbs	SJ	SK	SP	SQ	SR	ST	C	L
32	0.87 (22)	0.28 (7)	2.62 (66.5)	2.19 (55.5)	1.06 (27)	0.67 (17)	226	2.56 (65)	3.86 (98)	M8	2.11 (53.5)	0.55 (14)	0.47 (12)	2.24 (57)	8.90 (226)
40	1.26 (32)	0.28 (7)	3.09 (78.5)	2.58 (65.5)	1.34 (34)	0.94 (24)	608	2.56 (65)	4.41 (112)	M10	2.50 (63.5)	0.67 (17)	0.47 (12)	2.64 (67)	9.61 (244)
50	1.50 (38)	0.32 (8)	3.90 (99)	3.15 (80)	2.17 (55)	1.77 (45)	1042	2.76 (70)	5.35 (136)	M12	3.05 (77.5)	0.87 (22)	0.67 (17)	3.23 (82)	10.16 (258)
63	1.50 (38)	0.32 (8)	4.41 (112)	3.68 (93.5)	1.73 (44)	1.34 (34)	1042	2.76 (70)	6.22 (158)	M16	3.50 (89)	0.98 (25)	0.79 (20)	3.74 (95)	11.65 (296)

inches (mm)
SH = max. energy absorption

Parker Hannifin Corporation
Pneumatic Division
Richland, Michigan
www.parker.com/pneumatics

Positioning of stroke adjustment unit

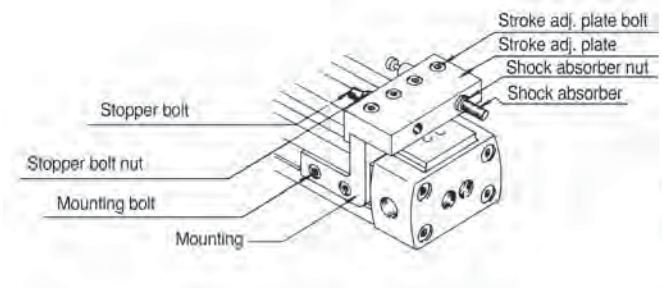

ø16~ø25

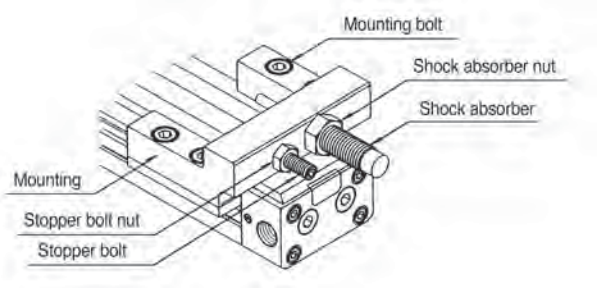

ø32~ø63

(1) Moving the stroke adjustment unit.
The stroke adjustment unit can be moved by loosening the mounting bolts.

(2) Locking of stroke adjustment unit.
After moving the stroke adjustment unit to the appropriate position, lock it there by tightening the mounting bolts to the torque values shown in Figure 4. Insufficient torque may cause the stroke adjustment unit to slip out of position.

Figure 4
Torque values for tightening stroke adjustment unit.

	Tightening torque	
Bore size	Mounting bolt (lb-in)	Stroke adj. plate bolt (lb-in)
16mm	9-11	4-6
20mm	22-24	
25mm	46-50	22-24
32mm	195-213	–
40mm	390-415	–
50, 63mm	682-735	–

(3) Stroke adjustment using the stopper bolt.
Adjust the stroke by loosening the stopper bolt nut and turning the stopper bolt. After adjusting the stroke, tighten the stopper bolt nut to the torque values shown in Figure 5. When adjusting the 16-25 mm cylinders, due to the small amount of clearance between the table and the stroke adjustment plate, adjust the stroke by moving the complete stroke adjustment unit.

Figure 5
Torque values for tightening stopper bolt nut and shock absorber nut.

	Tightening torque	
Bore size	Stopper bolt nut (lb-in)	Shock absorber nut (lb-in)
16mm	10-11	12-16
20mm	22-24	26-35
25mm	73-84	40-53
32mm	195-213	66-89
40mm	390-425	195-266
50mm	682-735	487-620
63mm	1772-1914	487-620

(4) Adjustment of shock absorber.
Adjust the absorption energy of the shock absorber by changing the operating stroke of the shock absorber. This is done by loosening the shock absorber nut and turning the unit. When adjustment is complete, tighten the shock absorber nut to the torque values shown in Figure 12a.

(5) Notes on usage.
The shock absorber absorbs rated energy with rated stroke. The factory setting allows a small amount of shock absorber stroke before it bottoms out. Readjust the location of the shock absorber so that the complete stroke of the absorber is utilized.

Absorption energy as set at factory:
Small margin with stroke of shock absorber.

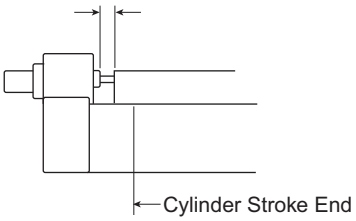

Adjust the position of the shock absorber until the plunger of the shock absorber is fully depressed.

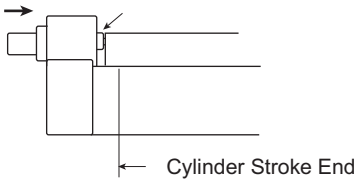

Parker Hannifin Corporation
Pneumatic Division
Richland, Michigan
www.parker.com/pneumatics

P1Z Series

- Available in 3 bores with stroke lengths up to 2000 mm
- Adjustable air cushioning is available on all cylinderS
- The load is fixed onto the mobile carriage by 4 tapped holes
- The cylinder is attached by the ends with jam nuts, flanges or foot mounts

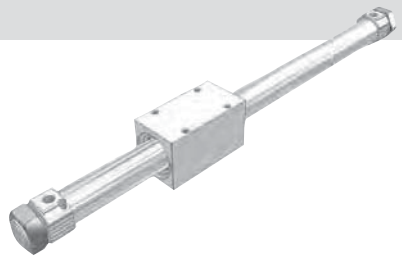

Technical data

Bore size		Weights			
		Weight at zero stroke		Weight per 25mm of stroke	
mm	inch	kg	lbs	kg	lbs
16	5/8	0.28	0.62	0.01	0.02
20	3/4	0.46	1.01	0.02	0.05
32	1-1/4	1.35	2.98	0.04	0.08

Operating information

Maximum pressure:	100 PSIG (7 bar)
Minimum pressure:	29 PSI (2 bar)
Temperature range:	14°F to 140°F (-10°C to 60°C)
Filtration requirements:	Dry, filtered compressed air to ISO 8573-1 class 3. 4. 3. or better

If external lubrication is added, this must always be continued.

Specifications for P1Z series magnetically coupled rodless

Bore size mm (inch nominal)	16 (5/8)	20 (3/4)	32 (1 1/4)
Port size	M5 BSPP, 10-32 NPT	1/8 BSPP, 1/8 NPT	1/8 BSPP, 1/8 NPT
Maximum stroke mm (inch)	1000 (39.4)	1500 (59.1)	2000 (78.7)
Stroke tolerance mm	+1.5/-0	<=1000 +1.5/-0; >1000 +2/-0	
Piston speed m/s (inch/sec)	0.1 to 0.4 (4 to 15.75)		
Max. coupling force N (lbs)	157 (35)	236 (53)	703 (158)
Cushion	Air cushion standard		
Lubrication	Not required (If you choose to lubricate your system, continuing lubrication will be required.)		

Ordering information

Standard cylinder (15 positions) | **Options (16 positions)**

P 1 Z M 0 1 6 S N N 0 5 0 0 B F M N

Bore	
016	Ø 16 mm
020	Ø 20 mm
032	Ø 32 mm

Cushioning	
N	None (Ø 16 only)
A	Adjustable Cushions

Strokes	
0200	200 mm
1000	1000 mm

Mounting kit*	
F	Footmount
L	Flanges
N	None (std.)

Options *	
B†	None
W	With options

† Standard when "B" option is used.

Cylinder port type	
M†	Metric (Ø 16 only)
B†	BSPP (Ø 20 & 32)
N	NPTF (Ø 20 & 32)

* Cylinders are supplied with mounting nuts fitted on each endplate.

Ø	Stroke (mm)	(in)
16	0 to 1000	0 to 39.4
20	0 to 1500	0 to 59.1
32	0 to 2000	0 to 78.7

Order code examples:

- P1ZM016SNN0100B — Ø 16 mm bore 100 mm stroke cylinder supplied with mounting nut on each endplate
- P1ZM020SAN1000WFBN — Ø 20 mm bore 1 m stroke cylinder with foot mount on each endplate

Parker Hannifin Corporation
Pneumatic Division
Richland, Michigan
www.parker.com/pneumatics

Basic Version

The magnetic rodless cylinder is a pneumatic cylinder featuring a mobile piston fitted with annular magnets.

The mobile carriage is also equipped with magnets to provide magnetic coupling between the piston and carriage.

It incorporates the following features:

- end of stroke cushioning/bumpers
- mounting:
  – threaded endcaps
  – optional foot mount
  – optional flange mount

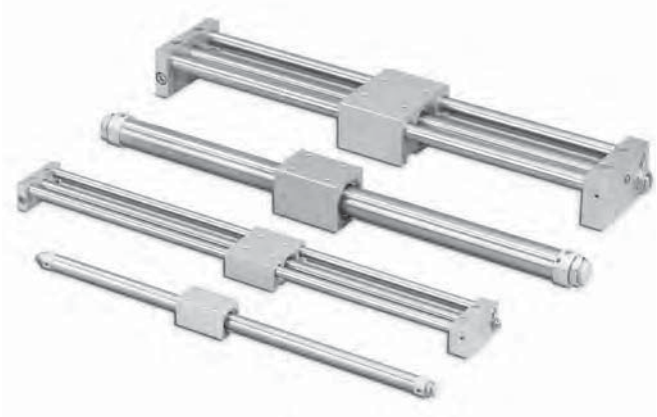

Sensors
For sensors see page B339.

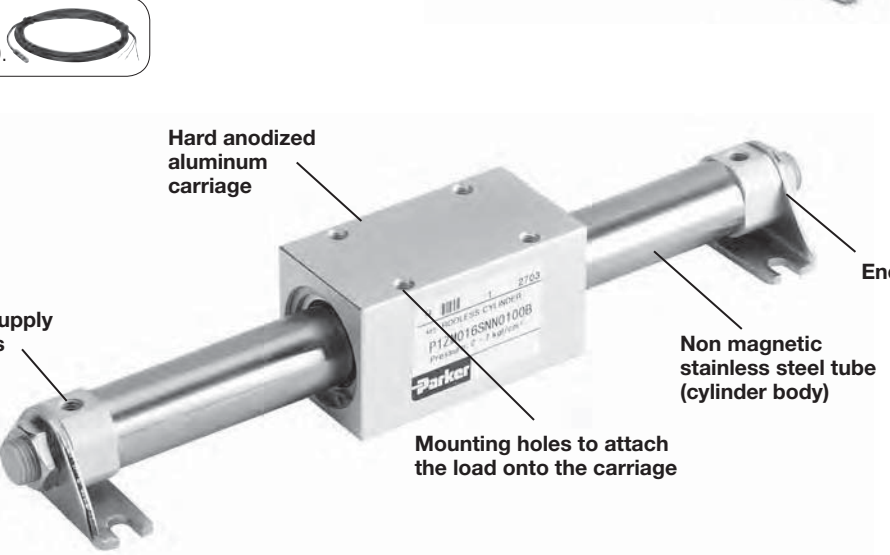

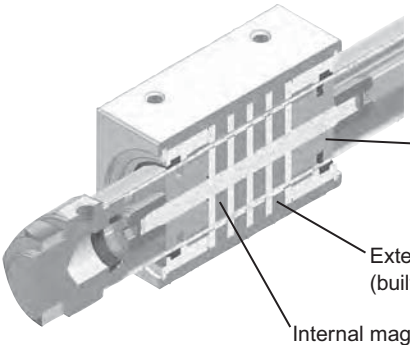

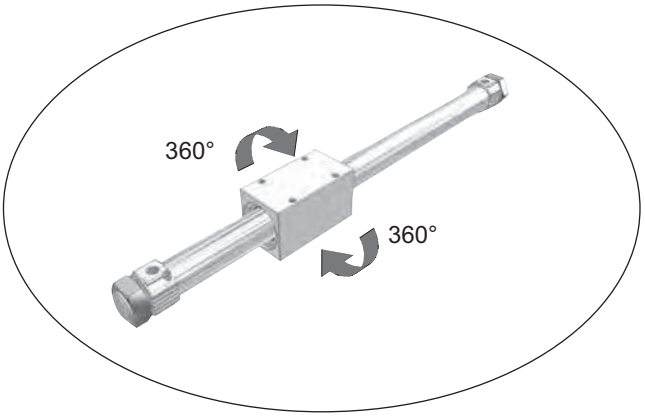

Cushioning

Ø 16 mm: non-adjustable bumper or adjustable pneumatic cushioning

Ø 20 and 32 mm: adjustable pneumatic cushioning

Mounting

The mobile carriage is free to rotate 360° around the cylinder axis. This feature facilitates the adaptation of the cylinder to various mounting arrangements.

The load must be guided by an external device.

Parker Hannifin Corporation
Pneumatic Division
Richland, Michigan
www.parker.com/pneumatics

Technical data

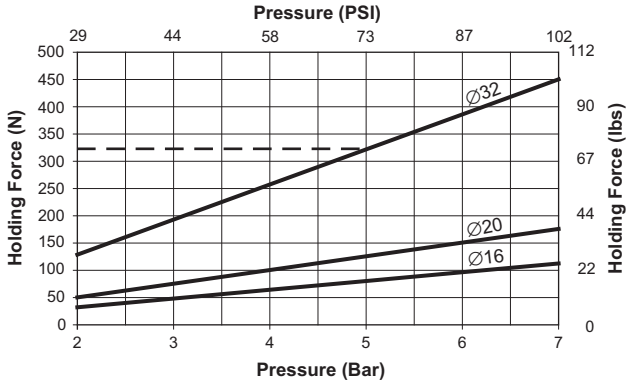

Example:
Pressure: 5 bar

F_{max} = 322 N for Ø 32 mm cylinder

⚠ Calculate the kinetic energy due to the load moved

Acceleration or deceleration should not exceed the magnetic coupling force of cylinder

Load diagrams

Permissible radial loads, horizontal mounting

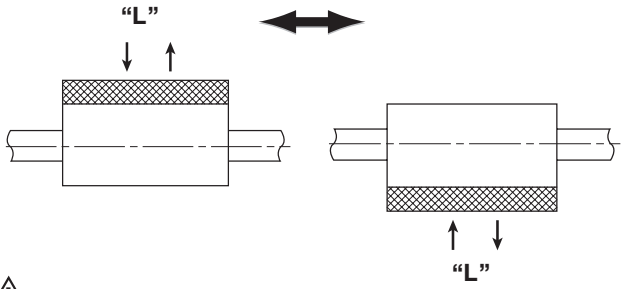

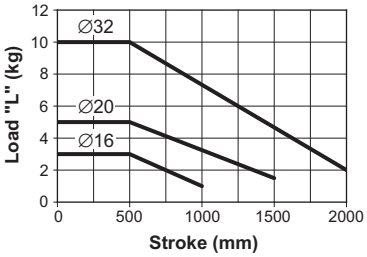

Ø	L Max. (kg)	(lbs.)
16	3	6.6
20	5	11.0
32	10	22.0

⚠ The load must be guided by a device from outside the cylinder

Permissible axial loads, horizontal mounting

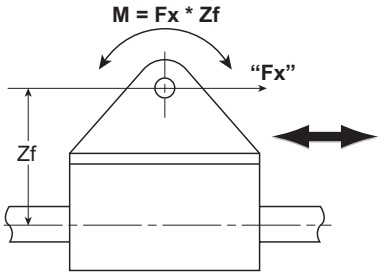

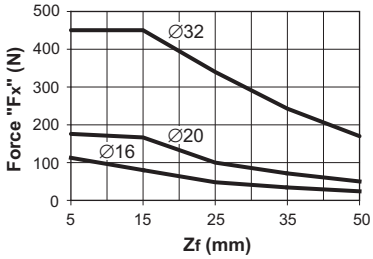

Ø	Max. Moment M (Nm)	(in-lbs.)	Max. Fx* (N	(lbs.)
16	1.2	11	112	25
20	2.5	22	175	39
32	8.5	75	450	101

* at 7 bar

⚠ The load must be guided by a device from outside the cylinder

Permissible axial loads, vertical mounting

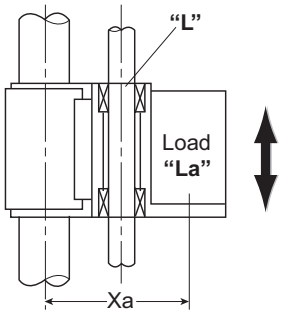

*If force due friction is unknown, use 0.1 × (L + La).

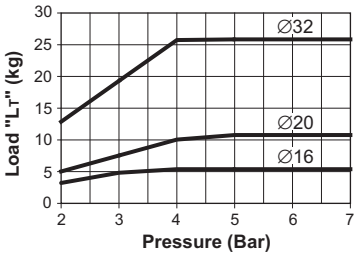

Ø	Max. load T (kg)	(lbs.)	Max. XA (mm)	(in.)
16	5	11	122	4.8
20	10	22	142	5.6
32	24	53	174	6.8

* at 6.5 bar

L = Load guided by external device
La = Direct mounting onto the cylinder
Ff = Force due to friction*

LT = Load weight + guiding device weight + force due to friction

Parker Hannifin Corporation
Pneumatic Division
Richland, Michigan
www.parker.com/pneumatics

Dimensions

** = Air supply Ports

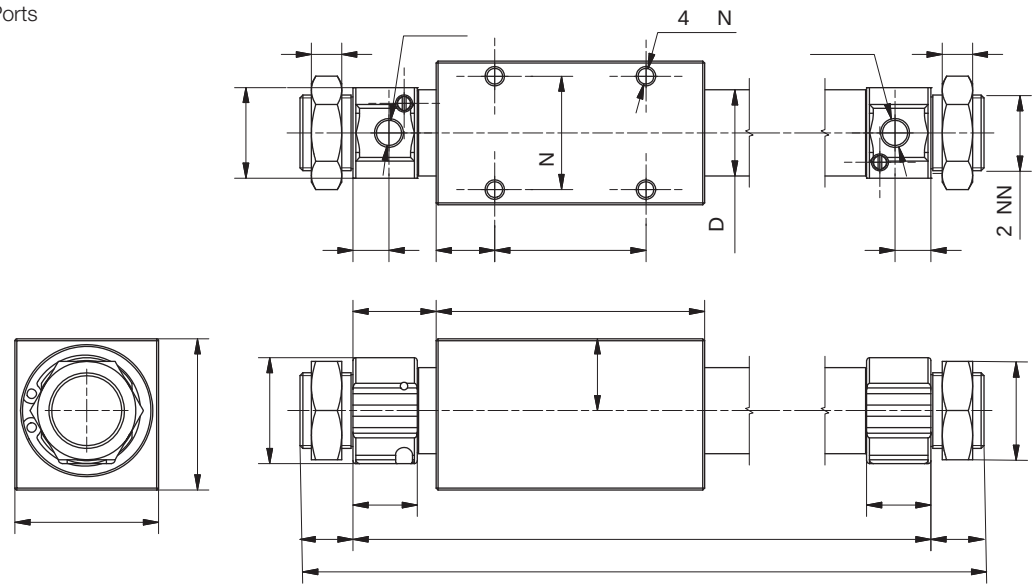

Ø	A	AA	B	ØD	E	Ø EH	Ø EV	F	FV	G	H	L	LJ	M	N	O
16	32 (1.26)	34 (1.34)	10 (0.39)	18 (0.71)	11 (0.43)	18 (0.71)	18 (0.71)	4 (0.16)	14 (0.55)	5.5 (0.22)	15.5 (0.61)	61 (2.40)	16 (0.63)	34 (1.34)	25 (0.98)	13.5 (0.53)
20	38 (1.50)	40 (1.57)	14 (0.55)	22.8 (0.90)	17 (0.67)	28 (1.10)	24 (0.94)	8 (0.31)	26 (1.02)	9.5 (0.37)	22 (0.87)	71 (2.80)	19 (0.75)	40 (1.57)	30 (1.18)	15.5 (0.61)
32	60 (2.36)	60 (2.36)	16 (0.63)	35 (1.38)	17 (0.67)	40 (1.57)	36 (1.42)	8 (0.31)	32 (1.26)	9.5 (0.37)	23 (0.91)	87 (3.43)	30 (1.18)	50 (1.97)	40 (1.57)	18.5 (0.73)

Ø	P	MN	NN	S	TL
16	M5 x 0.8 (10-32)	M4 x 0.7 x 6	M10 x 1 x 6	92 (3.62)	112 (4.41)
20	G 1/8 (1/8)	M5 x 0.8 x 8	M20 x 1.5 x 7	115 (4.53)	143 (5.63)
32	G 1/8 (1/8)	M6 x 1 x 10	M26 x 1.5 x 7	133 (5.24)	165 (6.50)

Parker Hannifin Corporation
Pneumatic Division
Richland, Michigan
www.parker.com/pneumatics

Mountings

Flanges

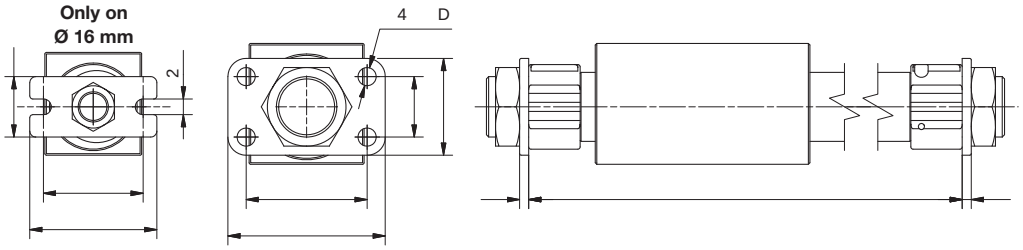

Ø	F	ØFD	FW	FX	FY	FZ	T	LS	Order code
16	5.2 (0.20)	–	42 (1.65)	33 (1.30)	–	20 (0.79)	2.3 (0.09)	92 (3.62)	**PDC15-FH**
20	–	6 (0.24)	52 (2.05)	40 (1.57)	20 (0.78)	32 (1.26)	3 (0.12)	115 (4.53)	**PK1A20-FH**
32	–	7 (0.28)	80 (3.15)	64 (2.52)	28 (1.10)	44 (1.73)	5 (0.20)	133 (5.24)	**PK1A25-FH**

Brackets

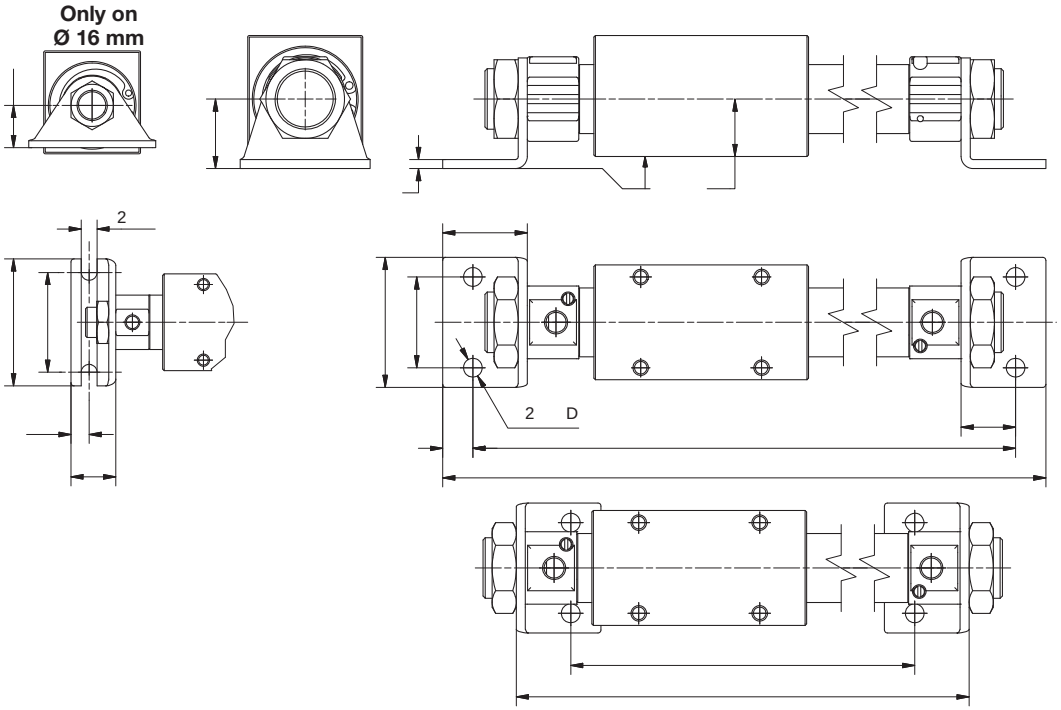

Ø	t	L	LC	ØLD	LE	LF	LH	LJ	LK	LX	LY	LS	LT	XL	XM	Order code
16	2.3 (0.09)	14.8 (0.58)	8.8 (0.35)	–	5.2 (0.20)	6 (0.24)	14 (0.55)	16 (0.63)	-2 (-0.08)	33 (1.30)	42 (1.65)	109.6 (4.32)	79 (3.11)	121.6 (4.79)	96.6 (3.80)	**PDC15-LB***
20	3 (0.12)	28 (1.10)	18 (0.71)	6.2 (0.24)	–	10 (0.39)	23 (0.91)	19 (0.75)	4 (0.16)	30 (1.18)	43 (1.69)	151 (5.94)	85 (3.35)	171 (6.73)	121 (4.76)	**PK1A20-LB***
32	3 (0.12)	35 (1.38)	23 (0.91)	7 (0.28)	–	12 (0.47)	30 (1.18)	30 (1.18)	0 (0)	46 (1.81)	62 (2.44)	179 (7.05)	**	203 (7.99)	**	**PK1A25-LB***

* Set of 2 pcs
** Impossible mounting

Parker Hannifin Corporation
Pneumatic Division
Richland, Michigan
www.parker.com/pneumatics

P1Z Series - Guided Version

The magnetic rodless cylinder is a pneumatic cylinder featuring a mobile piston with annular magnets.

The mobile carriage is also equipped with magnets to give magnetic coupling between the piston and carriage. The carriage slides along the main tube and is guided by two guide rods.

It incorporates the following features:

- Built-in guide rods
- Adjustable end-of-stroke bumpers
- Optional magnetic piston sensing
- Optional transfer porting

Guidance

The guided version consists of a carriage fitted with 4 plain bearings, guided on 2 rods.

This design provides high rigidity, accurate guidance and smooth movement of the carriage.

End of stroke

Each endplate can be fitted with an adjustable bumper or self-compensating shock absorbers.

Optional transfer porting

Cylinder air supply is located on one end only to facilitate cylinder installation and avoid long tube lengths for longer strokes.

Options

The following options are available to enhance the Magnetic Rodless cylinder functions:

- External bumpers: when low operating pressure, light loads and short strokes.
- External hydraulic shock absorbers: recommended for arduous applications.
- Reed and solid state sensors: provide sensing at an adjustable position along the entire stroke of the cylinder.

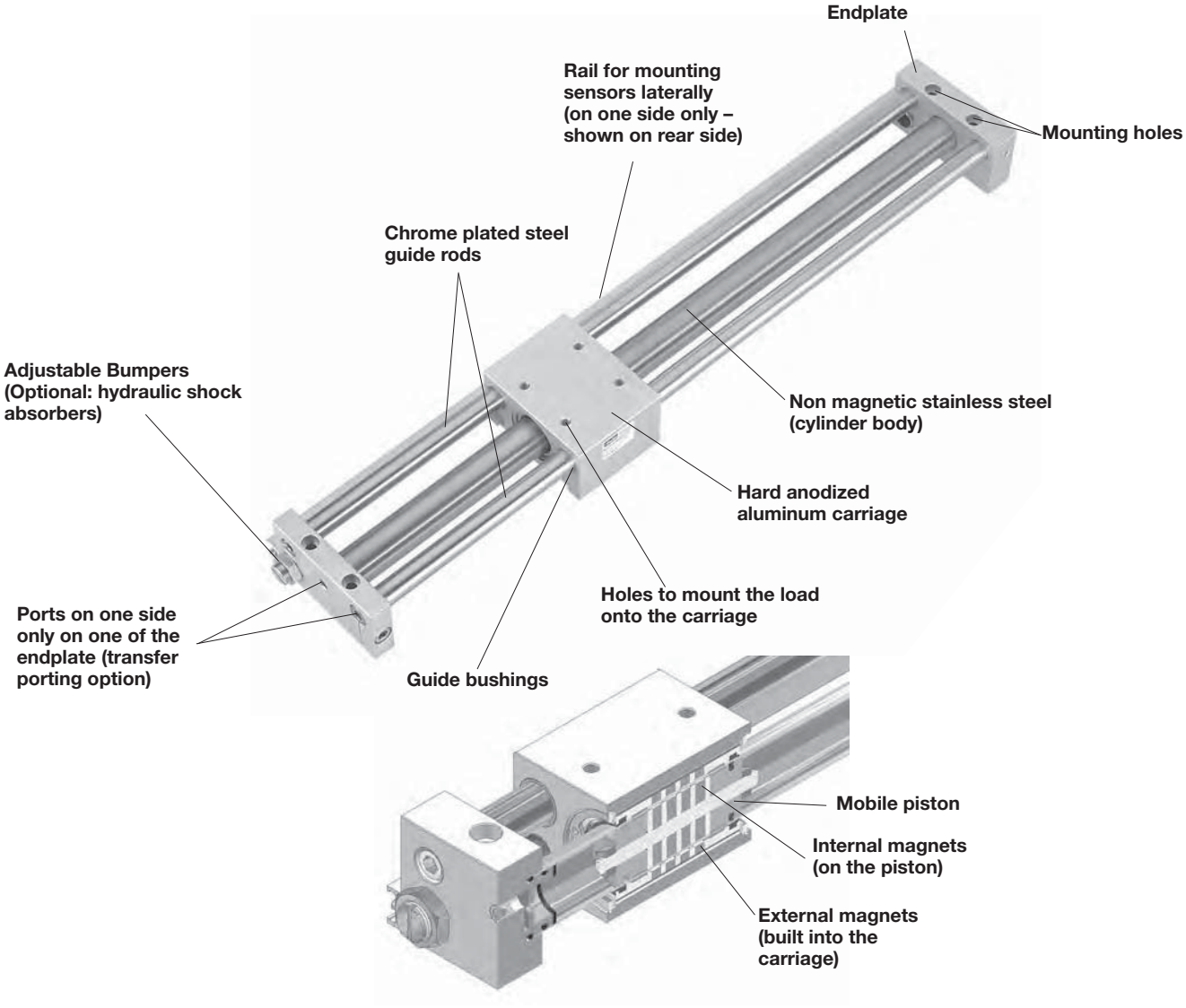

Parker Hannifin Corporation
Pneumatic Division
Richland, Michigan
www.parker.com/pneumatics

Ordering information

Standard cylinder (15 positions)															Options (16 positions)
P	1	Z	M	0	1	6	T	C	N	0	5	0	0	B	N	M	L

Bore	
016	Ø 16 mm
020	Ø 20 mm
032	Ø 32 mm

Cushioning	
C	Adjustable stop
H	Hydraulic shock absorber

Strokes	
0200	200 mm
1000	1000 mm

Cylinder port type	
M†	Metric (Ø 16 only)
B†	BSPP (Ø 20 & 32)
N	NPTF (Ø 20 & 32)

† Standard when "B" option is used.

Function	
G	Guided
T	Guided with transfer porting

Options	
B†	None
W	With options

End of stroke sensing			
NPN	PNP	Reed	Sensors type (Qty: 2)
L			With rail, no sensor
N† (std.)			No sensor rail

Note: Order Sensors separately.

Ø	Stroke (mm)	(in)
16	0 to 750	0 to 29.5
20	0 to 1000	0 to 39.4
32	0 to 1000	0 to 59.1

Order code examples:

- P1ZM016GCN0100B Ø 16 mm bore 100 mm stroke cylinder supplied with adjustable stop
- P1ZM020GHN1000WNBL Ø 20 mm bore 1 m stroke cylinder with hydraulic shock absorbers and rail for sensors

Range

Magnetic rodless cylinder, guided version
Available in 3 diameters with possible strokes up to 1500 mm (59 in).

4 tapped mounting holes on the carriage.

Endcap mounting provided by 4 tapped and counterbored holes.

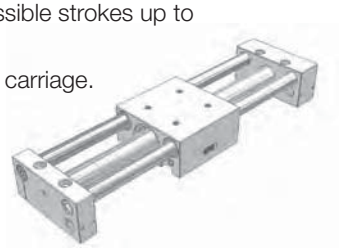

Options

External adjustable bumpers
Can be fitted on cylinder endcaps and provide noise reduction and adjustment at the end of stroke.

Used when light loads and short strokes.
Pneumatic air supply on one side only (transfer porting option).

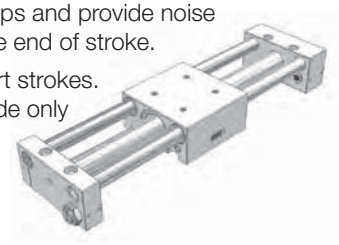

External hydraulic shock absorbers
Self-compensating hydraulic shock absorbers can be used instead of bumpers for a greater cushioning effect at the end of stroke.

They are recommended for arduous applications.

Reed or solid state sensors:
A rail fitted on one side only of the cylinder provides mounting and position adjustment of sensors.

The rail is located on same side as the end of stroke stops.

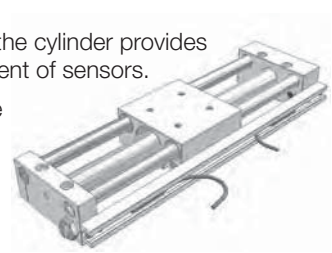

Parker Hannifin Corporation
Pneumatic Division
Richland, Michigan
www.parker.com/pneumatics

General features

Specifications for P1Z series magnetically coupled rodless

Operating medium	Compressed Air		
Maximum pressure	100 PSIG (7 bar)		
Minimum pressure bar (IPS)	29 PSIG (2 bar)		
Bore size mm (inch nominal)	16 (5/8)	20 (3/4)	32 (1 1/4)
Port size	M5 BSPP, 10-32 NPT	1/8 BSPP, 1/8 NPT	1/8 BSPP, 1/8 NPT
Ambient temperature	14°F to 140°F (-10°C to 60°C)		
Maximum stroke mm (inch)	750 (29.5)	1000 (39.4)	1500 (59.1)
Stroke tolerance mm	+1.5/-0	<=1000 +1.5/-0; >1000 +2/-0	
Piston speed m/s (inch/sec)	0.1 to 0.4 (4 to 15.75)		
Max. coupling force N (Lbs)	157 (35)	236 (53)	703 (158)
Cushion	Air cushion standard		
Lubrication	Not required (If you choose to lubricate your system, continuing lubrication will be required.)		

Weights

Bore size		Weight at zero stroke		Weight per 25mm of stroke	
mm	inch	kg	lbs	kg	lbs
16	5/8	0.9	1.98	0.05	0.11
20	3/4	1.52	3.35	0.08	0.17
32	1-1/4	3.63	8.00	0.13	0.29

Options

Function	Description
Detection	Sensors mounting in T-slot
	Reed or solid state sensors (PNP or NPN)
External rubber bumpers	Supplied pre-fitted in endplates if chosen
Hydraulic shock absorbers	Self-compensating shock absorbers supplied pre-fitted in endplates if chosen

Pressure in the cylinder / pneumatic holding force

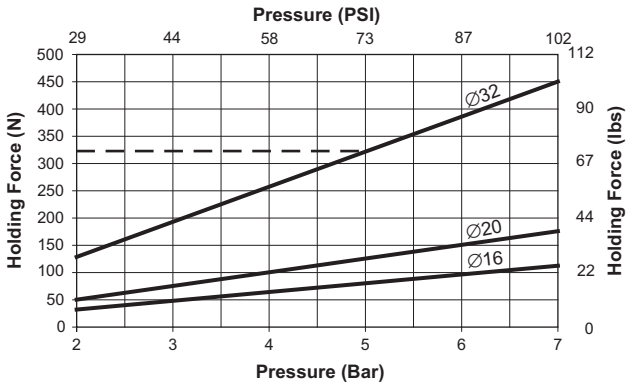

Example:
Pressure: 5 bar (73 PSI)

F_{max} = 322 N (72 lbs.) for Ø 32 mm cylinder

⚠ Calculate the kinetic energy due to the load moved.

Acceleration or deceleration should not exceed the magnetic coupling force of cylinder.

Parker Hannifin Corporation
Pneumatic Division
Richland, Michigan
www.parker.com/pneumatics

Load diagrams

Permissible radial loads, horizontal mounting

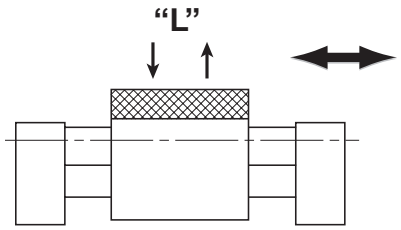

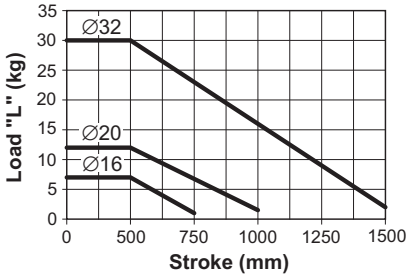

Ø	L Max. (kg)	(lbs.)
16	7	15
20	12	26
32	30	66

Permissible axial loads, horizontal mounting

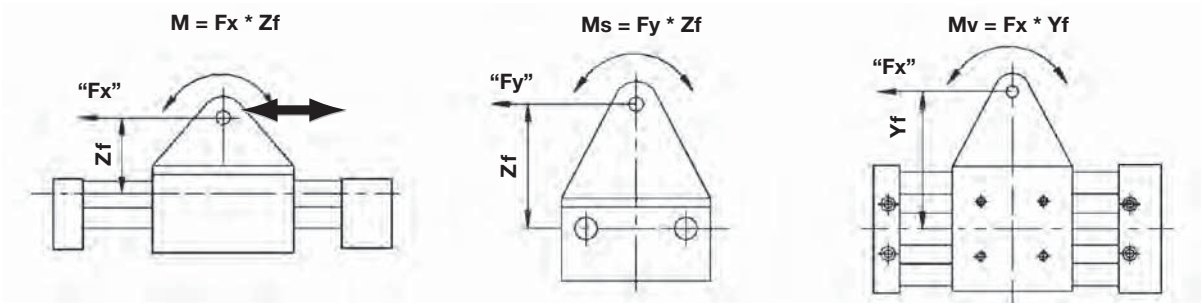

Ø	Max. moment M (Nm)	(in-lbs.)	Max. moment Ms (Nm)	(in-lbs.)	Max. moment Mv (Nm)	(in-lbs.)
16	2.4	21	0.5	4.4	2.4	21
20	5	44	1	8.9	5	44
32	15	133	3	26.6	15	133

Permissible axial loads, vertical mounting

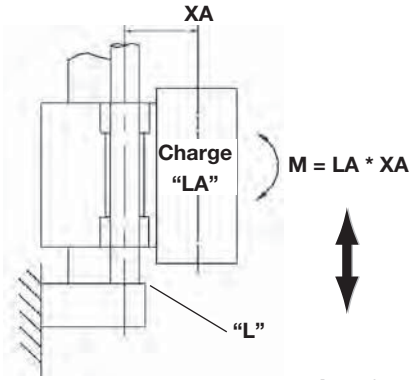

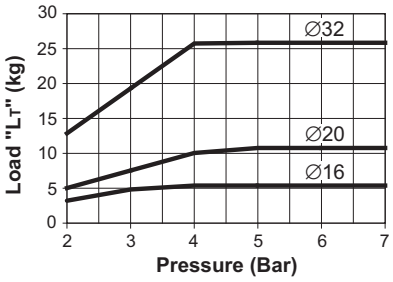

Ø	Max. load LT* (kg)	Max. XA (mm)
16	5	122
20	10	142
32	24	174

* at 6.5 bar

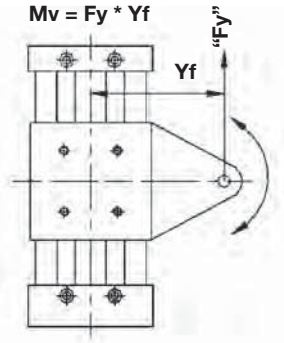

L = Load guided by external device

LA = Mounting direct onto cylinder

LT = Load weight + guiding device weight + force due to friction

Ff* = Force due to friction

*If force due to friction is unknown, use 0.1 * (L + LA)

Parker Hannifin Corporation
Pneumatic Division
Richland, Michigan
www.parker.com/pneumatics

Dimensions

** = Air supply ports

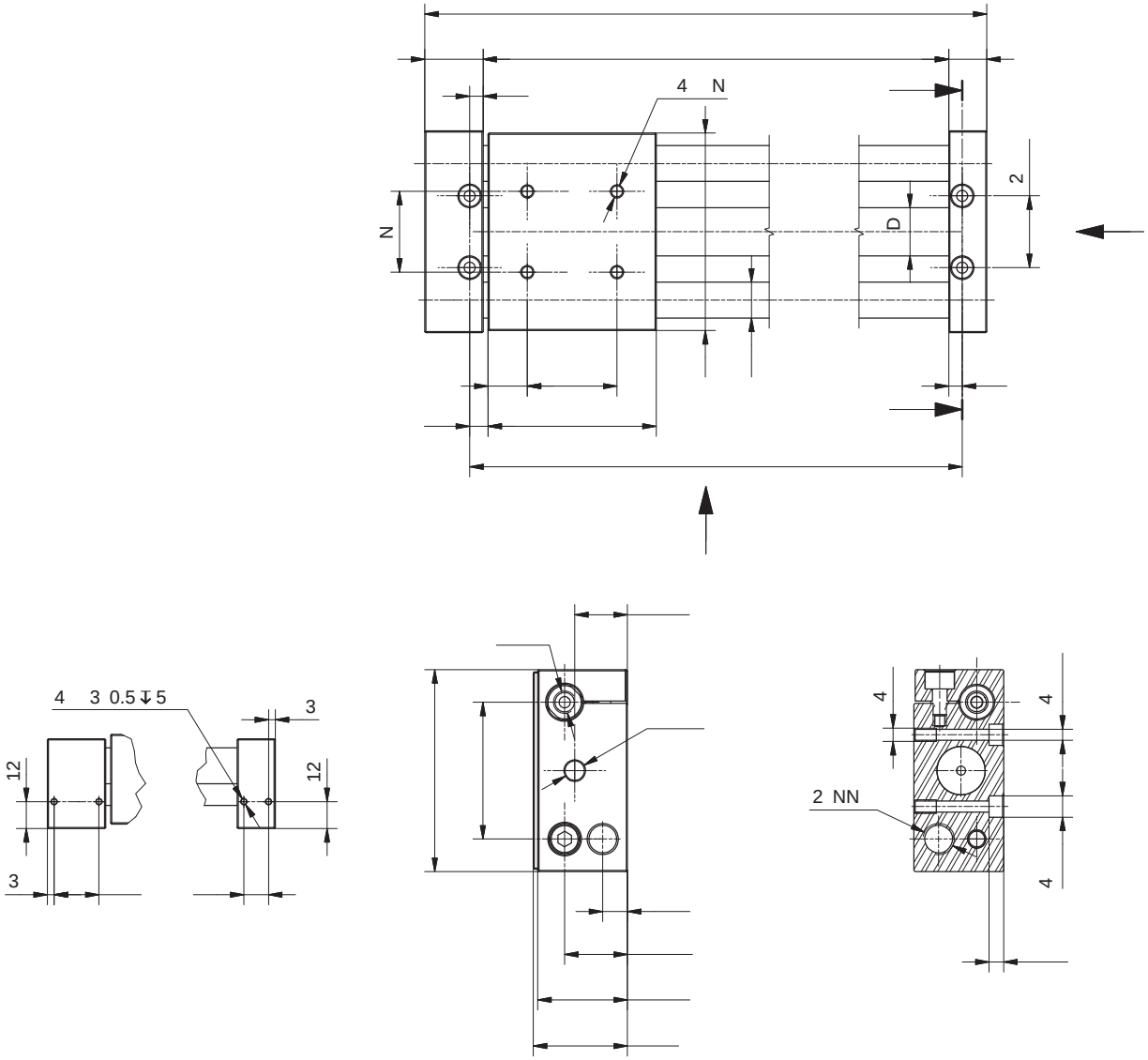

Ø	A	ØB	ØC	CC	ØD	Ød	F	G	H	HP	HG	HS	HT	L	M	N	MN
16	8 (.31)	4.3 (.17)	8 (.31)	4.5 (.18)	17.4 (.69)	12 (.47)	M5x0.8 x 10	6 (.24)	34 (1.34)	33.5 (1.32)	25 (0.98)	12 (.47)	21.5 (0.85)	65 (2.56)	34 (1.34)	30 (1.18)	M5 x 0.8 x 8
20	8 (.31)	5.5 (.22)	9.5 (.37)	6.5 (.26)	21.4 (.84)	16 (.63)	M6x1 x 10	6 (.24)	42 (1.65)	40 (1.57)	28 (1.10)	12 (.47)	23.5 (.93)	75 (2.95)	40 (1.57)	36 (1.42)	M6 x 1 x 10
32	13.5 (.53)	8.7 (.34)	14 (.55)	8 (.31)	33.6 (1.32)	20 (.79)	M10x1.5 x 15	10 (.39)	66 (2.60)	64 (2.52)	46 (1.81)	20 (.79)	41 (1.61)	91 (3.58)	60 (2.36)	50 (1.97)	M8 x 1.25 x 12

Ø	NN	O	P	PG	PW	PP	T	TT	S	TA	TL	W	XA	XB
16	M10 x 1 x 6	15.5 (0.61)	M5 x 0.8	50 (1.97)	70 (2.76)	27 (1.06)	14 (0.55)	23 (0.91)	69 (2.76)	81 (3.19)	106 (4.17)	68 (2.68)	17 (0.67)	8 (0.31)
20	M14 x1.5 x 7	17.5 (0.69)	G1/8	61 (2.40)	90 (3.54)	32 (1.26)	17 (0.67)	26 (1.02)	79 (3.11)	91 (3.58)	122 (4.80)	88 (3.46)	20 (0.79)	11 (0.43
32	M20 x 1.5 x 7	15.5 (0.61)	G1/8	86 (3.39)	122 (4.80)	50 (1.97)	20 (0.79)	28 (1.10)	97 (3.82)	117 (4.61)	145 (5.71)	118 (4.65)	22 (0.87)	14 (0.55)

Parker Hannifin Corporation
Pneumatic Division
Richland, Michigan
www.parker.com/pneumatics

Optional external adjustable bumpers

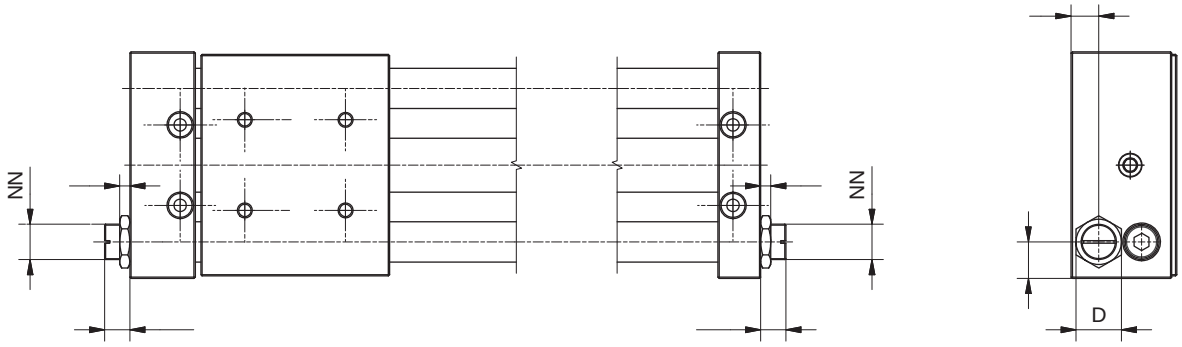

Ø	AA	AB	B	C	D	E	NN
16	7.5 (0.30)	6.5 (0.26)	12 (0.47)	10 (0.39)	14 (0.55)	4 (0.16)	M10 x 1
20	10 (0.39)	10 (0.39)	11 (0.43)	14.5 (0.57)	18 (0.71)	4 (0.16)	M14 x 1.5
32	11 (0.43)	12 (0.47)	20 (0.79)	18 (0.71)	26 (1.02)	8 (0.31)	M20 x 1.5

External hydraulic shock absorbers

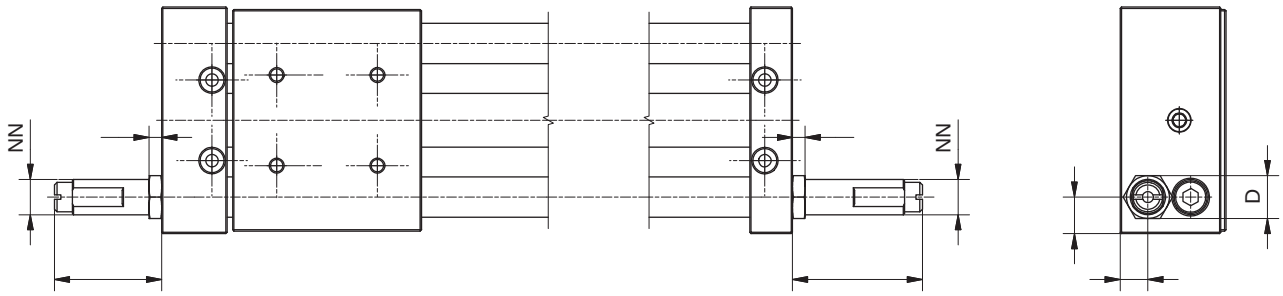

Ø	AA	AB	B	C	D	E	NN
16	18 (0.71)	27 (1.06)	12 (0.47)	10 (0.39)	13 (0.51)	3 (0.12)	M10 x 1
20	50 (1.97)	59 (2.32)	11 (0.43)	14.5 (0.57)	17 (0.67)	5 (0.20)	M14 x 1.5
32	56 (2.20)	66 (2.60)	20 (0.79)	18 (0.71)	24 (0.94)	6 (0.24)	M20 x 1.5

Loads / speeds diagram

The diagram to the right exhibits the P1Z cylinders maximum capacities with an adjustable bumper.

If the intersection exhibits between speed and load is above the curves, it is imperative to use hydraulic shock absorbers to prevent cylinder damage.

Example:
Ø 32 mm cylinder with a 0.3 m/s speed and 25 kg load
Choose the hydraulic shock absorber option
Ø 20mm cylinder with 0.2 m/s speed and 10 kg load
Choose the adjustable bumpers option

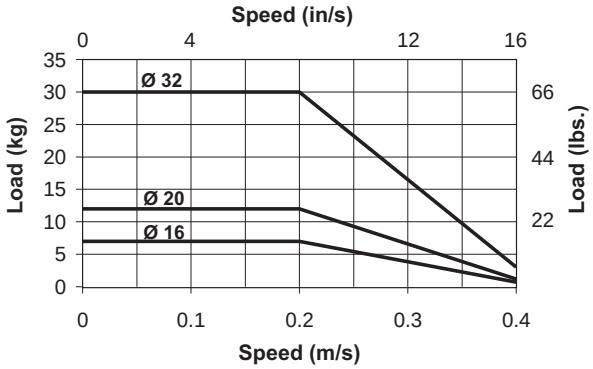

Parker Hannifin Corporation
Pneumatic Division
Richland, Michigan
www.parker.com/pneumatics

Optional sensor rail

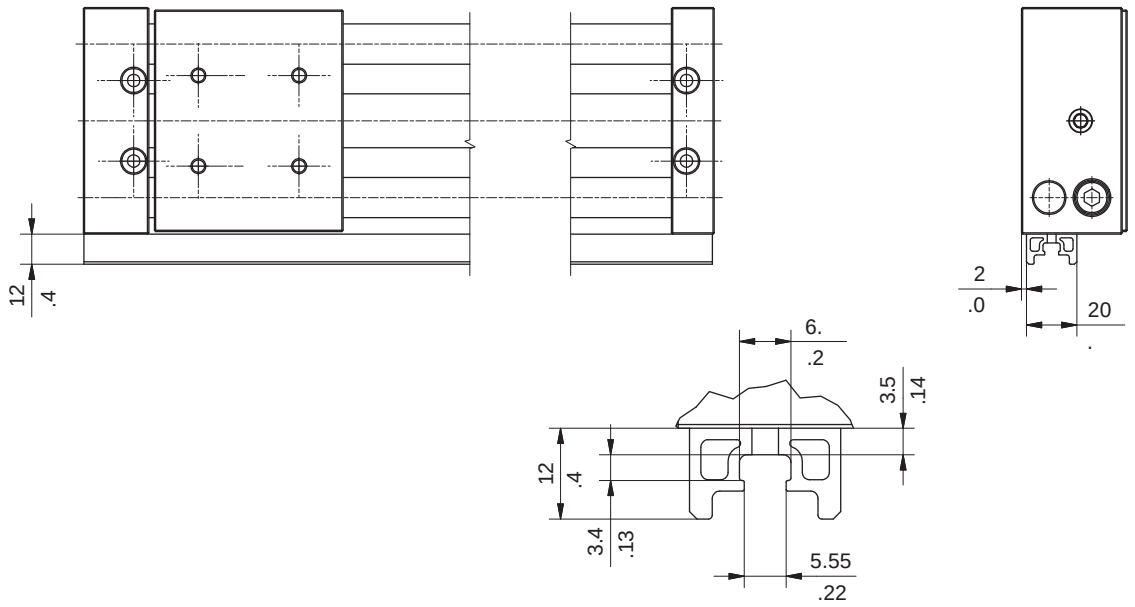

Detection

Reed or solid state sensor mounting is possible on one cylinder side only.

External aluminum profile integrates 1 T-slot for sensor mounting.

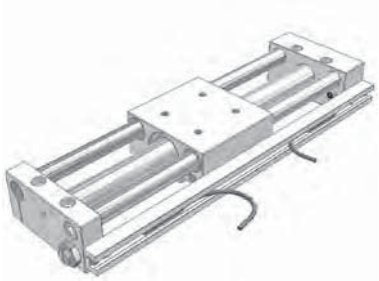

Repair kits

Ø	Basic version	Guided version
16 (Cushioned)	**P1ZM016SAN-R**	**–**
16 (Non-cushioned)	**P1ZM016SNN-R**	**P1ZM016GNN-R**
20	**P1ZM020SAN-R**	**P1ZM020GNN-R**
32	**P1ZM032SAN-R**	**P1ZM032GNN-R**

Parker Hannifin Corporation
Pneumatic Division
Richland, Michigan
www.parker.com/pneumatics

GDL Series

High Performance Series:
(Sizes FDC12HP-... thru FDC45HP-...)

The High Performance series is the basis for GDL's development, which is used in the majority of applications. High Performance guides consist of 8 axial needle roller bearings, running on precision polished and hardened alloy spring steel guideways. These guide bearings are grease packed and shielded, while offering the highest load and moment rating capacities within the GDL product line.

Standard Performance Series:
(Sizes FDC12SP-... thru FDC45SP-...)

The Standard Performance series is intended for minor loads and moments for particularly economical guidance solutions. Standard Performance guides consist of 8 radial ball roller bearings, running on precision polished and hardened alloy spring steel guideways. These guide bearings are grease packed and sealed, while offering the lowest load and moment ratings available within the GDL product line, with the exception of the Grease-Free and the Anti-Friction / Corrosion Resistant series. Standard Performance series is the second most commonly used GDL guides for various applications and also provides excellent running behavior.

Material specifications

Rail	Aluminum alloy
Guideways	Hardened high alloy spring steel
Cassettes / rollershoes / top plates	Aluminum alloy
Rollers	Bearing steel / Stainless steel bearing steel

Specifications

Characteristic	Unit	Description
Full profile wipers		Rollershoes and cassette are provided with snap-on full profile wipers. The snap-on full profile wipers are easily replaceable with available wipers kits.
Acceleration and deceleration	m/s^2 (ft/sec^2)	40 m/s^2 maximum (131 ft/s^2 maximum)
Guide installation		Possible in any position.
Drag adjustment set screw		Cassettes can be adjusted at the factory or by the customer.
		Rollershoes can be set-up by the customer to incorporate the drag adjustment set screw feature. The drag adjustment set screw components are supplied with each pair of rollershoes.
Standard lubrication		Lifetime lubrication with standard grease-packed roller bearings.
Speed	m/s (ft/s)	Up to 10 m/s (or up to 33 ft/s)
Bearing types		Steel axial needle, Specials on request (ex: anti-magnetic, grease free, high dynamics) - consult factory
Operating temperature	C (F)	-10°C to 80°C (14°F to 176°F) temperature range
Specials available		Custom length cassettes and rollershoes for 100 piece lots minimum.
		Keyed butt-jointed rail sections up to 4000mm.
		Solid continuous length rails between 4000.
		Offset or non-standard "L11" dimensions on opposite ends of cut rails.
		Integrated metal scraper with standard full profile wiper currently available.
		Rail underside blind mounting holes.

Parker Hannifin Corporation
Pneumatic Division
Richland, Michigan
www.parker.com/pneumatics

Cassette with double sided rail

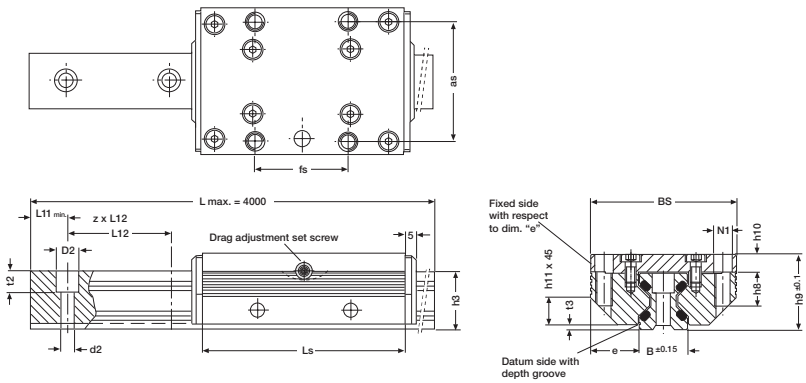

Dimensions for both standard FDC version guides

Size	Length Ls	B	BS	h3	h9	as	d2	D2	e	fs	h8	h10	h11	L11 min.	L12	t2	t3	N1
12	64	12.0	37	14.7	19	30	3.4	6	12.50	25	8	4.0	6	10	40	5.5	1.4	M4
15	78	15.5	47	18.7	24	38	4.5	8	15.75	30	10	5.0	8	10	60	6.0	2.0	M5
20	92	21.0	63	22.6	30	53	5.5	10	21.00	40	12	7.0	11	10	60	7.0	2.0	M6
25	98	23.0	70	27.0	36	57	6.6	11	23.50	45	16	8.5	13	10	60	10.0	2.5	M8
35	135	32.0	100	37.0	48	82	9.0	15	34.00	62	20	10.5	20	12	80	11.5	3.5	M10
45	165	45.0	120	46.0	60	100	11.0	18	37.50	80	24	13.5	22	16	105	14.5	4.0	M12

Dimensions (mm)

Dimensions for both underside mounting hole FDC version guides (Ref. ordering instructions)

Size	Length Ls	B	BS	h3	h9	as	d2	D2	e	fs	h8	h10	h11	L11 min.	L12	t2	t3	N1
12	64	12.0	37	14.7	19	30	3.4	6	12.50	29	8	4.0	6	10	40	5.5	1.4	M4
15	78	15.5	47	18.7	24	38	4.5	8	15.75	34	10	5.0	8	10	60	6.0	2.0	M5
20	92	21.0	63	22.6	30	53	5.5	10	21.00	40	12	7.0	11	10	60	7.0	2.0	M6
25	98	23.0	70	27.0	36	57	6.6	11	23.50	45	16	8.5	13	10	60	10.0	2.5	M8
35	135	32.0	100	37.0	48	82	9.0	15	34.00	62	20	10.5	20	12	80	11.5	3.5	M10
45	165	45.0	120	46.0	60	100	11.0	18	37.50	90	24	13.5	22	16	105	14.5	4.0	M12

Dimensions (mm)

Roll

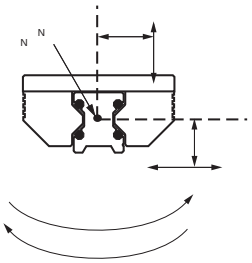

Pitch

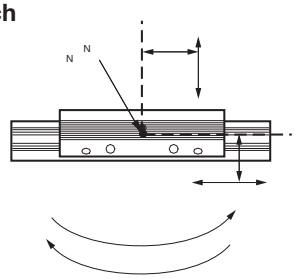

Yaw

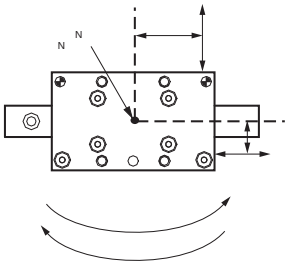

Load & moment rating capacities (for cassettes on double sided rail)

Dynamic load rating C (N)	Static load rating Co (N)	Static moment rating capacities: Roll Mocx (Nm)	Pitch Mocy (Nm)	Yaw Mocz (Nm)	Dynamic moment rating capacities: Roll Mcx (Nm)	Pitch Mcy (Nm)	Yaw Mcz (Nm)	Cassette weight (kg)	Rail weight (kg)	Cassette series
High performance series										
2800	3000	27	43	43	25	40	40	0.1	0.4	**FDC12HP-...**
4200	3400	37	58	58	45	72	72	0.3	0.8	**FDC15HP-...**
5400	5400	76	111	111	76	111	111	0.4	0.9	**FDC20HP-...**
9000	10100	158	222	222	142	198	198	0.6	1.8	**FDC25HP-...**
12500	18000	423	559	559	294	388	388	1.5	3.2	**FDC35HP-...**
21200	25900	827	983	983	678	806	806	2.9	5.5	**FDC45HP-...**

Parker Hannifin Corporation
Pneumatic Division
Richland, Michigan
www.parker.com/pneumatics

GDL Aluminum roller guides

High performance cassettes with lock device

Special cassette types

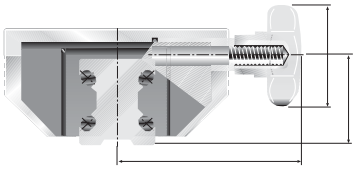

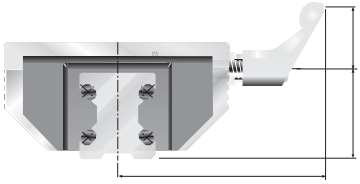

The locking cassette with star grip handle can be stopped at any desired location on the rail. The clamping device does not exert forces on the rail guideways.

The clamping device is used in fixtures which are movable manually, clamping and stop ledgers, feeding of tools and work pieces. Also available with L-ratchet handle.

Star grip handle dimensions

Size	Øa	b	h	Clamp force	Part numbers star grip knob
12	N/A				
15	25	41	19.0	200	**FDC15HP-00020000**
20	25	49	23.0	250	**FDC20HP-00020000**
25	32	56	28.0	250	**FDC25HP-00020000**
35	50	83	38.5	350	**FDC35HP-00020000**
45	63	101	48.0	750	**FDC45HP-00020000**

Dimensions (mm), Force (N) with normal manual tightening.

L-ratchet handle dimensions

Size	l	b	h	Clamp force	Part numbers L-ratchet handle
12	N/A				
15	45	59.5	19.0	200	**FDC15HP-00010000**
20	45	67.5	23.0	250	**FDC20HP-00010000**
25	45	71	28.0	250	**FDC25HP-00010000**
35	63	96	38.5	350	**FDC35HP-00010000**
45	78	116	48.0	750	**FDC45HP-00010000**

End of stroke stop screws

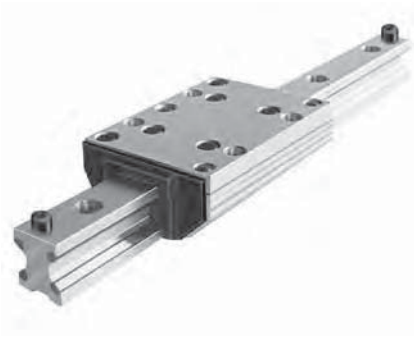

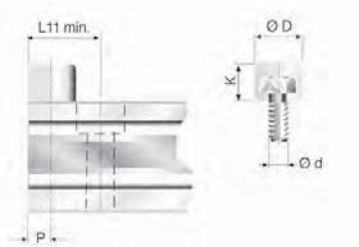

The stop screws are screwed into threads (option) on the guide rails. The end of stroke stopping energy is reduced by a rubber cap. With guide rails where the L11 is less than the standard minimum, we offset the mounting hole by half of its diameter.

Note: Customer must drill and tap the holes for the stop screws.

Size	Ød	ØD	K	L11 min.	P	Order number
12	M5	12	8	15.0	6.0	**63504A**
15	M5	12	8	16.0	6.0	**63504A**
20	M5	12	8	17.0	6.0	**63504A**
25	M6	15	10	20.5	7.5	**63505A**
35	M8	19	13	26.5	9.5	**63506A**
45	M10	24	16	33.0	12.0	**63507A**

Dimensions (mm)

GDL accessories

Rail mounting screw covers

Material: Wear resistant plastic, resistant to oil and aging.

Mounting: Put a plastic plate on top and pound in uniformly. Remove residual burrs with a soft brush or fingernail.

Note: Use respective order numbers for ordering separately or include in rail part number.

Size	Cylindrical screw DIN912	Ø D	Order number
12	M3	6	**87752A**
15	M4	8	**87753A**
20	M5	10	**87754A**
25	M6	11	**87755A**
35	M8	15	**87756A**
45	M10	18	**87757A**

Dimensions (mm)

Parker Hannifin Corporation
Pneumatic Division
Richland, Michigan
www.parker.com/pneumatics

GDL Aluminum roller guides

Version with wipers
Integrated into an additional cover, a felt wiper is saturated with oil. Although dependent on the degree of contaminants, these wipers last for some 6000km, after which the felt wipers can either be washed or replaced.

For optimal cassette rolling performance, all holes in the guide rails should be filled with the plastic rail mounting screw covers.

Order numbers for replacement wiper kits

FDC series and size	Respective order number
12	**84457B**
15	**84480B**
20	**84481B**
25	**84482B**
35	**84483B**
45	**84484B**

*wiper kits are sold in pairs
NOTE: Use respective order numbers for ordering separately as replacements, or specify in cassette part number.

Cassette with full profile snap-on wipers

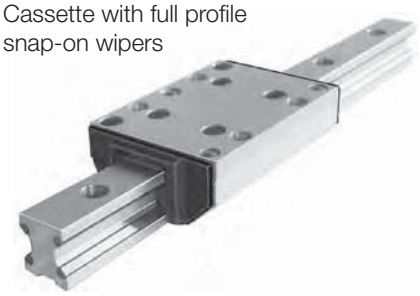

Full profile snap-on wiper

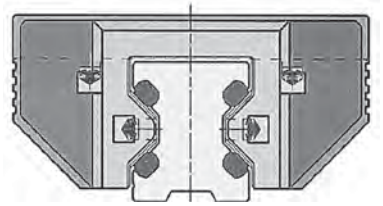

GDL's keyed butt-jointed rail option

GUIDELINE rails can be precisely fastened together using a factory offered keyed butt-joint option for continuous rail lengths, as shown in Figures 1 & 2.

Two rail sections are clamped together with mating round bar stock pieces that seat tangent to both rail section guideways on each side of the rail. While the rail sections are clamped together, a keyway slot is machined in the top and bottom sides of the rail, across the butt- joint. Screw holes are then drilled through the rail inside the keyway slot, so the opposing keyways can be drawn together tightly with screws. The round bar stock clamp is then removed, providing a rigid and well aligned keyed butt-joint.

The keyed butt-joint option provides optimum alignment of all guideways from one rail section to the next. This allows for optimum "smooth" guidance of the cassette bearings, while crossing rail butt-joints.

The keyed butt-jointed rail option is currently available in the FDR version 25, 35, & 45 mm rail sizes. For a keyed butt-joint on rail sizes 25, 35 or 45 mm, specify P/N:# GDL-BJK

Consult factory for other size possibilities.

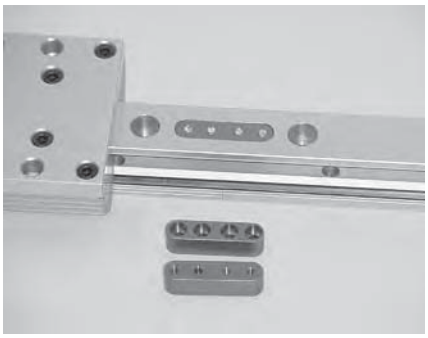

Figure 1

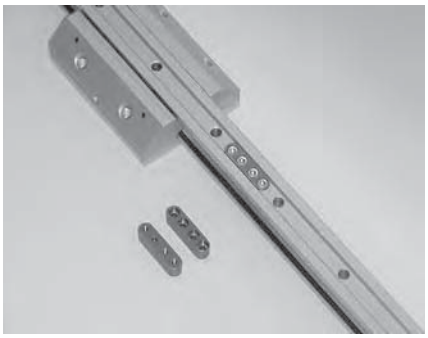

Figure 2

GDL coupled with structural aluminum extrusion material and OSP-E actuator

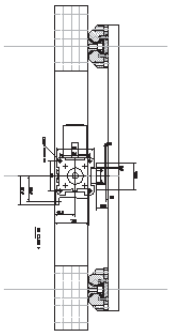

Figure 3

GDL linear guides couple well with various structural aluminum extrusions and Parker-Origa OSP-P and OSP-E actuators. Mounting can be easily accomplished using standard fasteners and mounting brackets. See Figure 3 above.

Parker Hannifin Corporation
Pneumatic Division
Richland, Michigan
www.parker.com/pneumatics

Ordering Information / Part Numbering System for GDL Rails

1	2	3	4	5	6	7	8	9	10	11	12	13	14	15	16	17	18
F	D	R	1	2	H	0	0	0	0	0	0	–	0	0	0	0	0

Series

FD	Double sided rail guide* (standard)

Rail

R	Standard

Rail Size

1	2*
1	5*
2	0*
2	5*
3	5*
4	5*

Guideway Material

H	High performance alloy steel* (standard)
S	Stainless steel

Coatings

0	Anodized aluminum* (standard)
Z	Custom (consult factory)

"L11" Dimension

00	Equal on both sides* (standard)
??	Actual dimension (mm)**

** As measured from left side while viewing the depth groove line.

Mounting Holes

0	Topside thru hole* (standard)
1	Underside blind thread
Z	Custom (consult factory)

Long Rail Joining Option

0	None* (standard)
1	Keyed butt joint (size 25-45 only)
2	Unkeyed butt joint

Screw Covers

0	None* (standard)
1	Yes*

Note: Quantity supplied to cover all rail holes.

Length (mm)

–	0	0	0	0	0

Note: Maximum length is 4 meters on Size 12.

*Stocked Item

Ordering Information / Part Numbering System for GDL Cassettes

1	2	3	4	5	6	7	8	9	10	11	12	13	14	15	16
F	D	C	1	2	H	P	–	0	0	0	0	0	0	0	0

Series

FD	Double sided rail cassette* (standard

Cassette

C	Standard

Rail Size

1	2*
1	5*
2	0*
2	5*
3	5*
4	5*

Bearing Options

HP	Axial needle - high performance alloy steel* (standard)
SP	Single row radial ball - standard performance - alloy steel* (standard)
ZZ	Factory** (consult factory

Grease

0	High performance* (standard)
Z	Custom (consult factory)

Lubrication Options

0	None* (standard)
Z	Custom (consult factory)**

Coatings

0	Anodized and standard hardware* (standard)
1	Anodized and stainless steel hardware*
Z	Custom (consult factory)

Locking Mechanism

0	None* (standard)
1	"L" ratchet handle*
2	Star grip handle*

* Locking mechanism only available on FD Series size 15 thru 45 with Axial Needle Bearing - High Performance - Alloy Steel.

Mounting Holes

0	Topside threaded thru* (standard)
1	Underside hole thru (unthreaded)
2	Underside hole thru (threaded)

Wiper Options

0	With felt wipers* (standard)
1	Without*
2	With felt wipers and scrapers*

Cassette Length

0	Normal length* (standard)
Z	Custom (consult factory)**

Adjustment

0	None* (standard)
1	Adjusted to specific rail*

*Stocked Item
**Minimum Order Quantity Required

Parker Hannifin Corporation
Pneumatic Division
Richland, Michigan
www.parker.com/pneumatics