Oildyne

108 Series Hydraulic Power Units

Pressures to 241 bar (3500 psi)
Flows to 2.8 lpm ($^3/_4$ gpm)

Typical applications

Positioning
- Hydraulic door operators
- Conveyor belt tensioners
- Medical chairs, beds, and equipment

Recreational Vehicles
- Leveling
- Slideouts
- Tent Trailers

Clamping
- Tool fixtures and jigs
- Hydraulic brakes
- Crimping tools
- Arbor presses
- Truck restraints

Cycling
- Garbage compactors
- Valve operators
- Press controls
- Packing equipment
- Indexing tables

Lifting
- Handicap lifts
- Scissor lift tables
- Pallet movers

108 Series Self-contained Hydraulic Power Units

Our compact 108 Series power units let you put the power where you need it. They're completely self-contained with an AC or DC motor, gear pump, reservoir, internal valving, load hold checks and relief valves.

The 108 Series models are designed for intermittent service and come in four standard pump sizes which produce flows of .0098, .0187, .0246, and .0321 cubic inches per revolution. Locking check valves are available in all models. Performance will vary with the type of fluid used. Several hydraulic circuits are available.

108 Series units are available with single- or bi-directional rotation. Single units are commonly used to charge accumulators, power one-direction hydraulic motors and cylinders, provide pilot flow to servo valves, pressurize lube systems and supply multi-function circuits with external valving.

Bi-directional, reversible units operate double-acting cylinders and two-way motors.

We'd like to work with you on your special hydraulic applications. Our people know small hydraulics. We know how to design them, how to make them and how to apply them. Therefore, we can offer you a practical, economical solution to your fluid power problems.

Oildyne has pioneered top quality, compact hydraulic components since 1955. We can provide standard products or custom design high pressure, space saving solutions to your specific needs.

Parker Hannifin Corporation
Oildyne Division
Minneapolis, MN 55428 USA

Standard Product Ordering Code

108 [ ] [ ] [ ] – [ ] [ ] – [ ] [ ] – [ ] – [ ]

108 POWER UNIT
- includes relief valve(s)

MOTOR CODE

AE	12 vdc Permanent Magnet
AM	12 vdc Series Wound
BE	24 vdc Permanent Magnet
BI	24 vdc Series Wound
HA	115 vac, 1 phase, Open
HD	230 vac, 1 phase, Open
IA	36 vdc Permanent Magnet

PUMP TYPE

S	Standard
C	Cold Temp

PUMP SIZE

10	.0098 CIPR
19	.0187 CIPR
25	.0249 CIPR
32	.0321 CIPR

RESERVOIR

A	26 cu. in. (13 cu. in. usable)
B	46 cu. in. (23 cu. in. usable)
C	46 cu. in. (26 cu. in. usable)
D	Alternate orientation version of C
F	122 cu. in. (82 cu. in. usable)
G	69 cu. in. (46 cu. in. usable)
H	1/2 gallon usable
I	1 gallon usable
J	1-1/2 gallon usable
P	1/4 gal. usable (plastic)
Q	1/2 gal. usable (plastic)
R	1 gal. usable (plastic)
S	3/4 gal. usable (plastic)

NOTES: C and D reservoirs are available as Vertical Mount ONLY. A reservoir with pump 32 is available ONLY as vertical mount.

CIRCUIT TYPE

NN	Single direction
WW	Single direction with check
RR	Reversible
LL	Reversible locking
RB	Reversible with Back Pressure
LB	Reversible locking with Back Pressure

Each Solenoid Valve option below includes the WW circuit:

S1	12 vdc, Normally Closed
S2	24 vdc, Normally Closed
S3	120 vac, Normally Closed
S4	240 vac, Normally Closed
S5	12 vdc, Normally Open
S6	24 vdc, Normally Open
S7	120 vac, Normally Open
S8	240 vac, Normally Open

PORTS

1	7/16-20 (SAE -4)
2	7/16-24 (Inv. Flare)
3	1/8" Pipe (NPSF)
4	1/8" Pipe (BSPP)

MOUNTING

V	Vertical (motor up)
H	Horizontal

UP RV SETTING
(Left Hand Port)
In multiples of 100 psi
Examples
04 = 400 psi
12 = 1200 psi
29 = 2900 psi

DN RV SETTING
(Right Hand Port)
Use **00** for Single Dir.
In multiples of 100 psi
Examples
04 = 400 psi
12 = 1200 psi
29 = 2900 psi

ORDERING CODE INSTRUCTIONS

Select the model code needed based on catalog information. All boxes above must be filled in before Oildyne can process the order. If the power unit is a single direction unit use '00' for the DN (Right Hand) relief valve box.

Hydraulic Fluid

ATF, OD18, or other clean hydraulic oil with a viscosity of 150 to 300 SUS at 38°C (100°F) is acceptable. If another type of fluid is needed, please consult the factory.

Temperature Range

Normal operating range is +20°F to +140°F. Please review your application with the factory for uses below -7°C and over +60°C (+20°F and over +140°F).

ALL DATA SUBJECT TO CHANGE WITHOUT NOTICE
FOR POWER UNIT CONFIGURATIONS OTHER THAN THOSE SHOWN PLEASE CONSULT OILDYNE.

Parker Hannifin Corporation
Oildyne Division
Minneapolis, MN 55428 USA

12/24 V DC Permanent Magnet Motor • Code AE • BE

Motor Type: AE and BE
For intermittent duty cycles.

Wiring Diagram: AE • BE

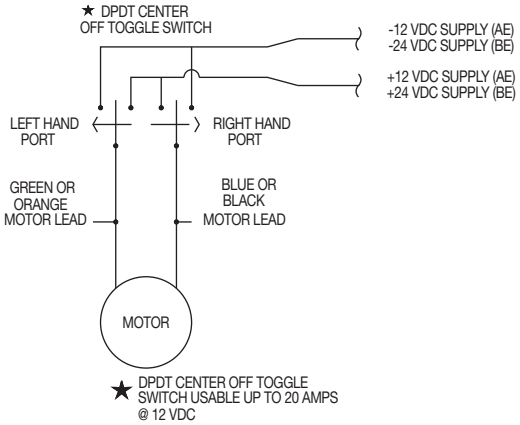

.100 Pump (.0098 cipr) with AE / BE Motor

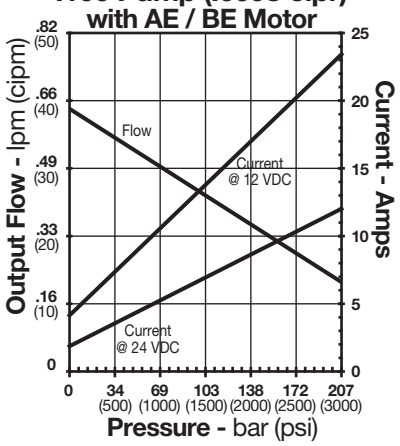

12/24 V DC Series Wound Motor • Code AM • BI

Motor Type: AM and BI
For intermittent duty cycles.

Wiring Diagram: AM • BI

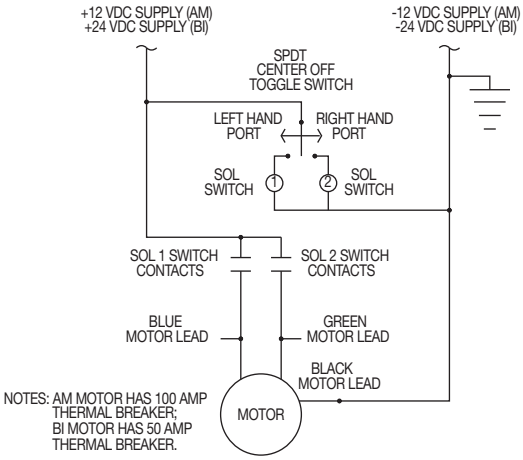

.100 Pump (.0098 cipr) with AM / BI Motor

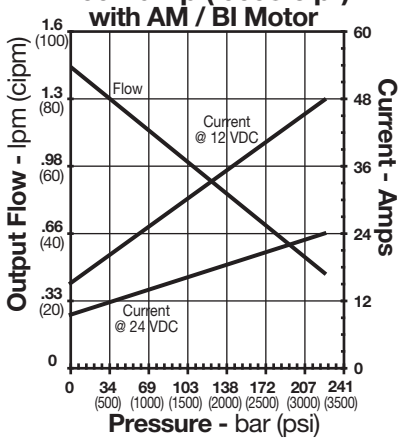

115/230 V AC Capacitor Start Motor • Code HA • HD

Motor Type: HA and HD
Dual voltage 1/3 HP, 60/50 hz, 3450/2850 rpm, intermittent duty, single phase, open frame. Capacitor and relay included.

Wiring Diagram: HA

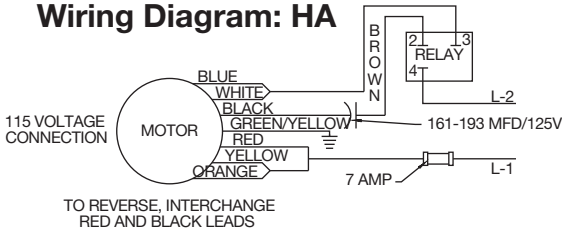

Wiring Diagram: HD

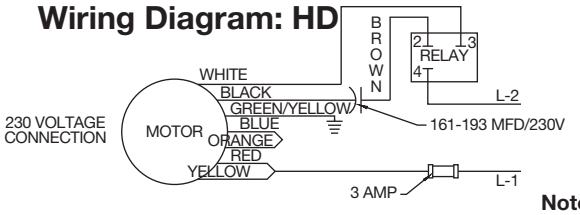

.100 Pump (.0098 cipr) with HA / HD Motor

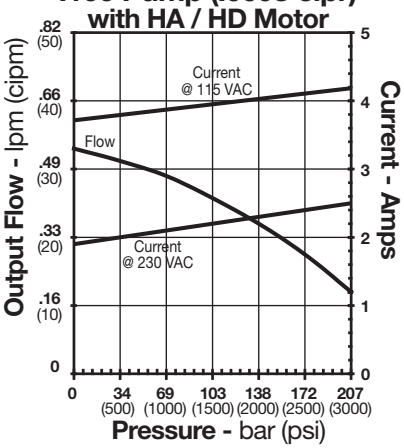

Note: 50 hz performance is 83% of curves shown.

Parker Hannifin Corporation
Oildyne Division
Minneapolis, MN 55428 USA

Performance data based on ATF @ 21°C (70°F)

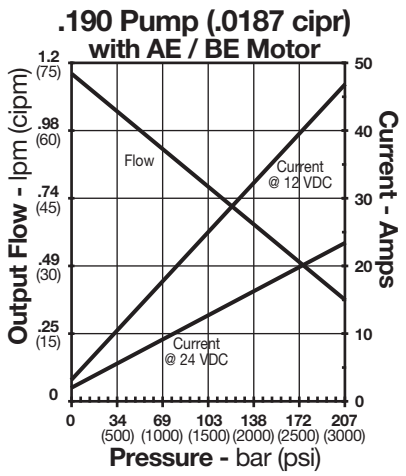

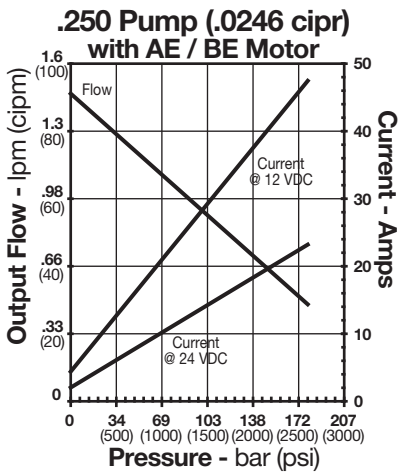

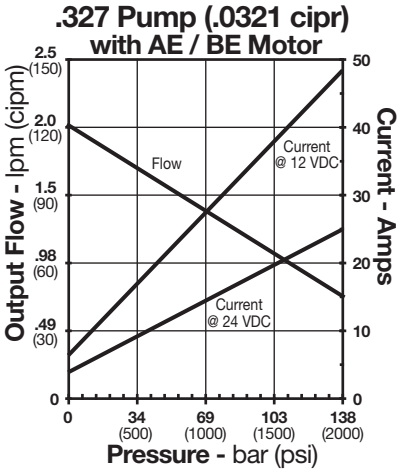

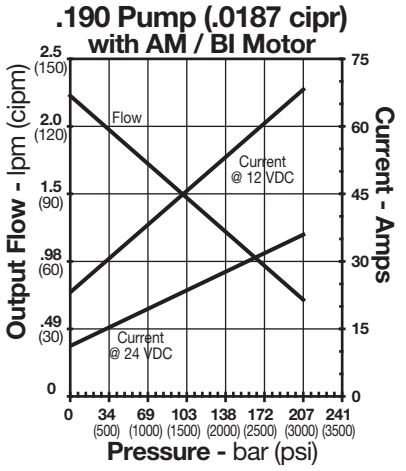

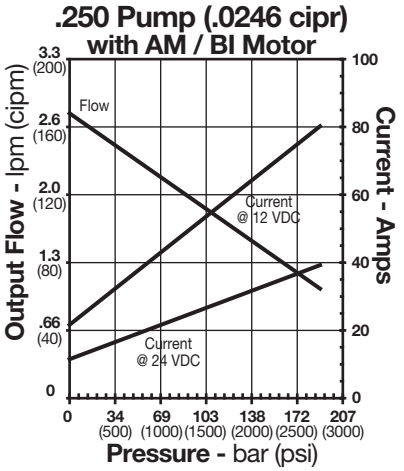

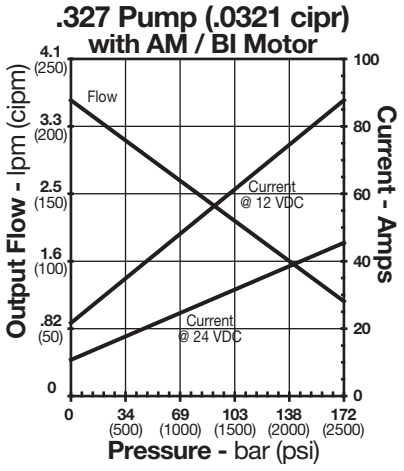

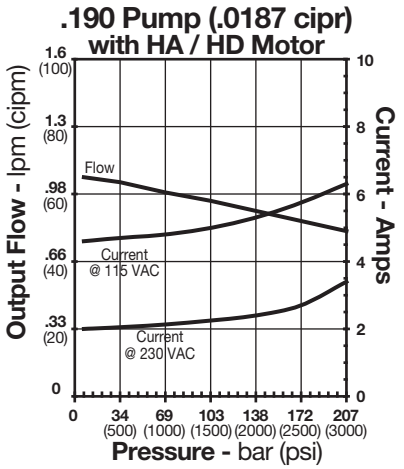

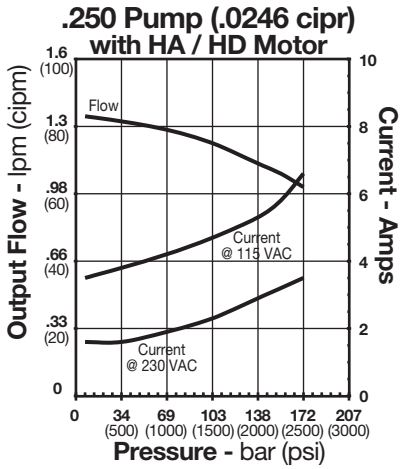

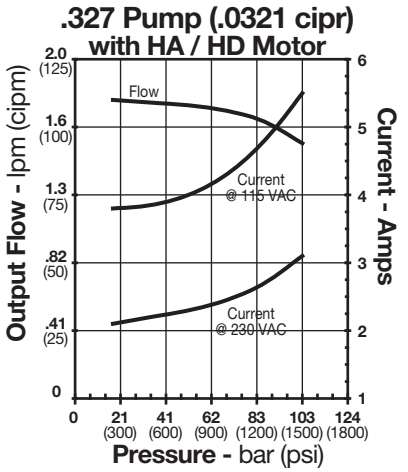

Note: Performance data is for reference only.

Parker Hannifin Corporation
Oildyne Division
Minneapolis, MN 55428 USA

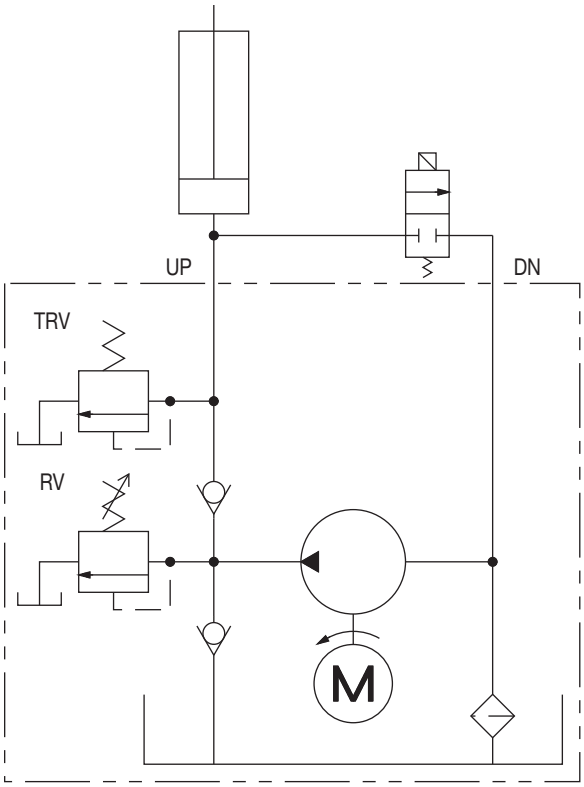

"WW" CIRCUIT

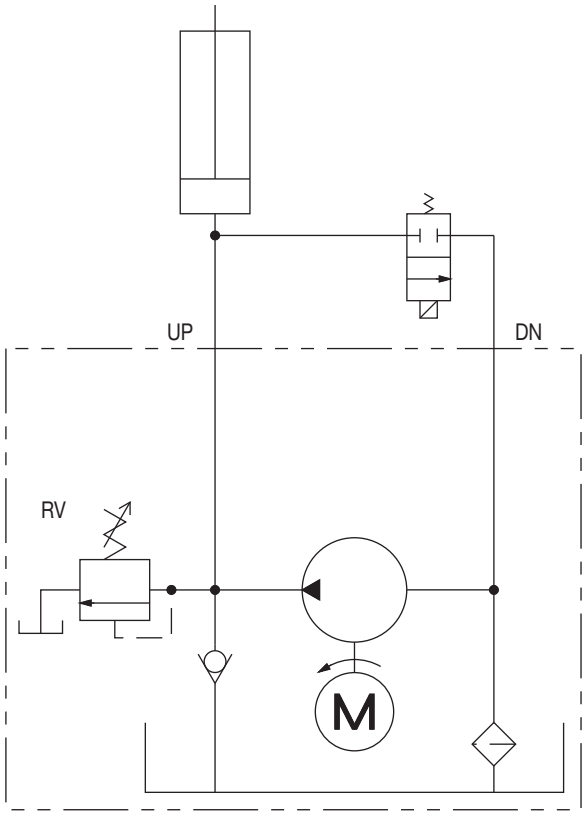

"NN" CIRCUIT

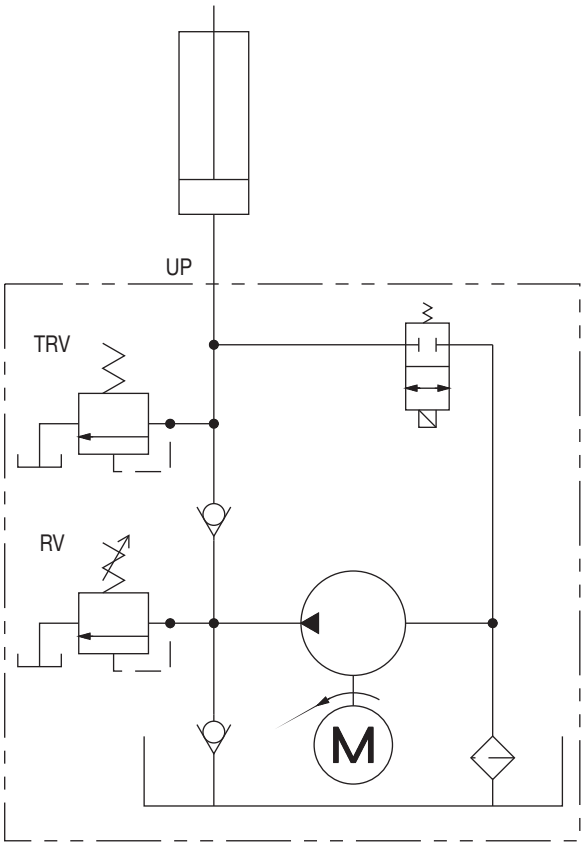

"S*" CIRCUIT

Thermal Relief Valves—Why?

The thermal relief valve's (TRV) purpose is to allow a bleed off of built up pressure due to thermal expansion of the fluid or to act as a (limited) shock load protection, should a cylinder in the system get bumped.

The thermal relief valve is included in circuits using a pilot operated check valve. The single direction units get one; the reversing units get two. It is located between the check valve and the 108 Series pump outlet port. It is a fixed relief valve with a pressure setting approximately 100-140 bar (1500-2000 psi) above the system relief valve pressure.

Parker Hannifin Corporation
Oildyne Division
Minneapolis, MN 55428 USA

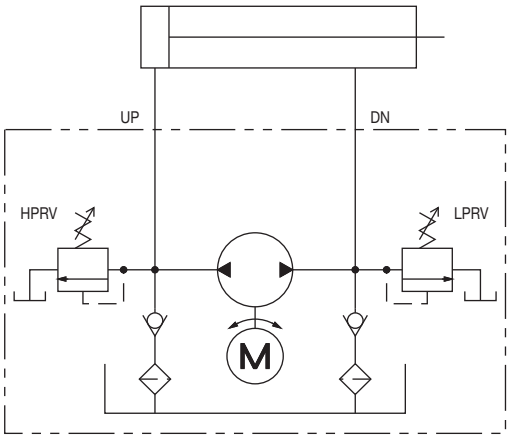

"RR" CIRCUIT

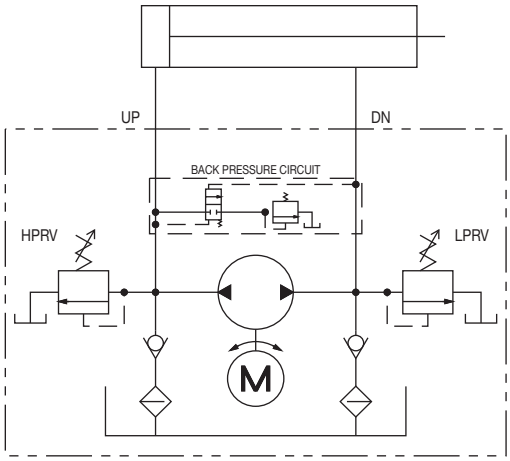

"RB" CIRCUIT

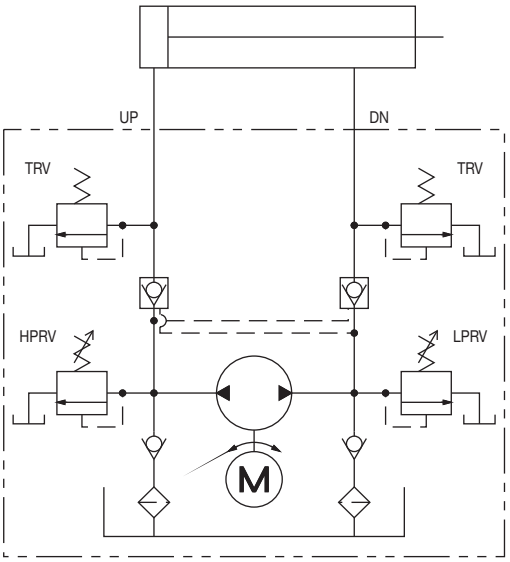

"LL" CIRCUIT

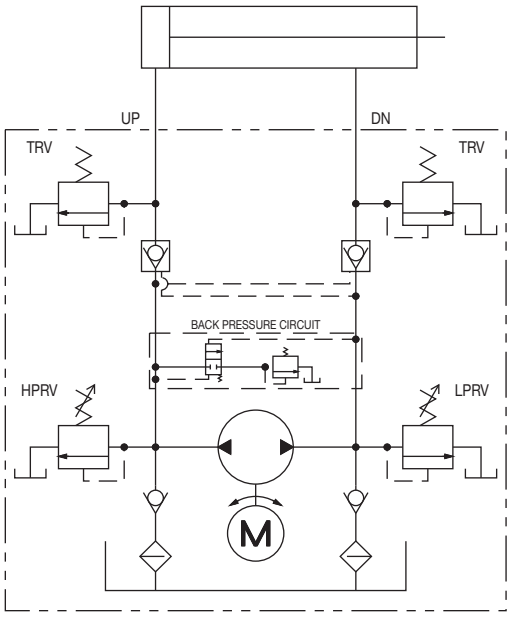

"LB" CIRCUIT

Back Pressure Circuits—Why?

The basic reversible circuit is essentially a closed loop. The oil returning from the system is fed back into the pump inlet. When a cylinder is being retracted more oil is being returned to the power unit than is leaving it due to the rod volume. This results in the DN side relief valve cracking open allowing the rod volume of oil to go back to the tank. The larger the rod volume the more open the relief valve will be. In many applications this is not a problem. However, if work is being done on the retract stroke, or if a pressure switch is used to signal the cylinder is fully retracted, the back pressure circuit is required. This circuit allows the rod volume of oil to return to the reservoir through a special shuttle spool, before it reaches the pump. Full relief valve pressure is then available to retract the cylinder, also preventing a pressure switch from tripping before the full retract position is achieved.

Recommended uses:

- In systems where work is being done on the retract stroke
- Where a pressure switch is used to signal the full retract position
- In systems requiring a faster retract than extend speed

Parker Hannifin Corporation
Oildyne Division
Minneapolis, MN 55428 USA

Overall Dimensions

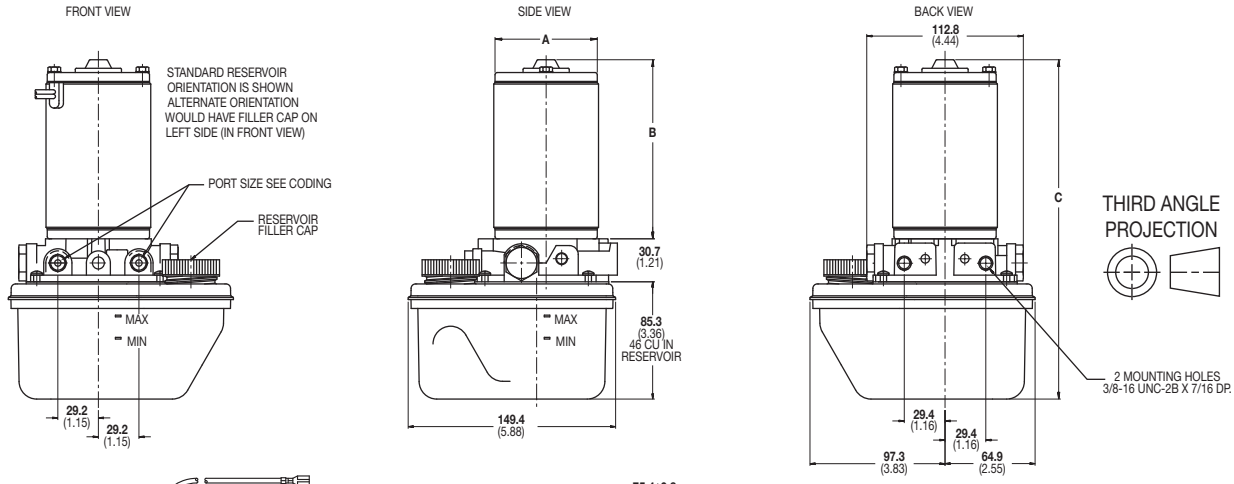

With Solenoid

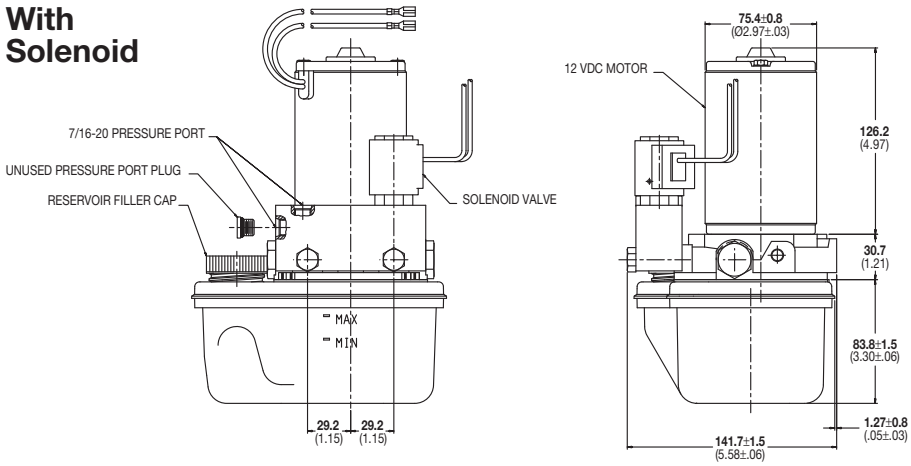

Motor Dimensions ±.1.3 (±.050)	A	B	C
AE/BE	**75.4** (2.97)	**126.2** (4.97)	**241.3** (9.50)
AM/BI	**95.8** (3.77)	**151.4** (5.96)	**266.4** (10.49)
IA	**75.4** (2.97)	**128.8** (5.07)	**244.1** (9.61)
HA/HD	**100.1** (3.94)	**161.0** (6.34)	**276.4** (10.88)

Note: All dimensions in **mm** (inches).

Reservoir Dimensions

Note: refer to page 17 for information on the P, Q, R and S reservoirs.

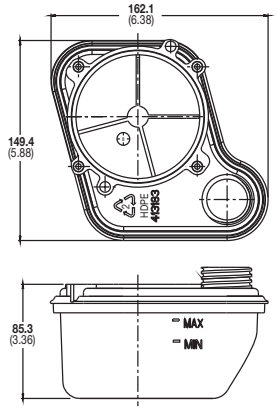

"C" RESERVOIR
46 CU. IN. (26 CU. IN. USABLE)
HIGH DENSITY POLYETHYLENE WITH UV ADDITIVE STD.
(754 CC: 426 CC USABLE)

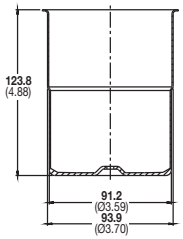

"B" RESERVOIR
46 CU. IN. (23 CU. IN. USABLE) ALUMINUM
(754 CC: 377 CC USABLE)

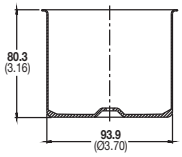

"A" RESERVOIR
28 CU. IN. (13 CU. IN. USABLE) ALUMINUM
(459 CC: 213 CC USABLE)

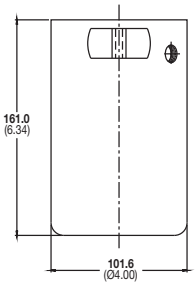

"G" RESERVOIR
#3-69 CU. IN. (46 CU. IN. USABLE) EXTRUDED ALUMINUM

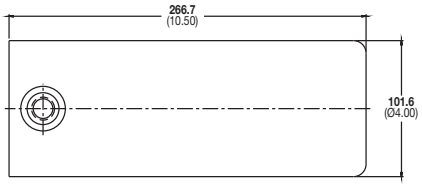

"F" RESERVOIR
122 CU. IN. (82 CU. IN. USABLE) STEEL
(2000 CC: 1344 CC USABLE)

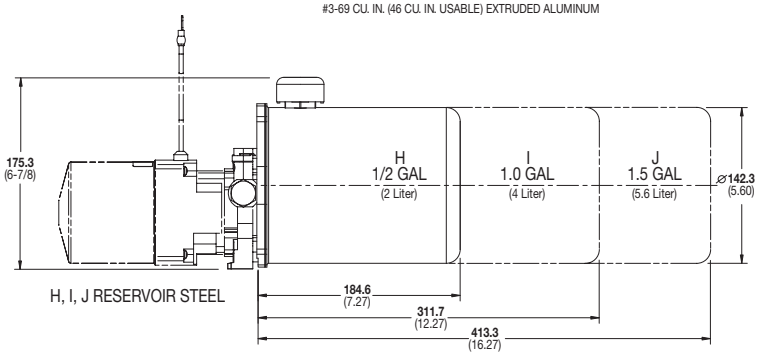

H, I, J RESERVOIR STEEL

Parker Hannifin Corporation
Oildyne Division
Minneapolis, MN 55428 USA

Oildyne

165 Series Hydraulic Power Units

Pressures to 241 bar (3500 psi)
Flows to 5.4 lpm (1.4 gpm)

We are pleased to introduce our new 165 Series power units. The 165 Series power units let you put more power where you need it. As big brother to our successful 108 Series, the 165 Series is completely self-contained with a DC motor, gear pump, reservoir, internal valving, load hold checks and relief valves.

The 165 Series units are designed for intermittent duty and are available in three standard pump sizes producing flows of .032, .050 and .065 cubic inches per revolution. The units are available for single or bi-directional application with a number of hydraulic circuit options similar to our 108 Series.

Single direction units are commonly used to charge accumulators, power single direction hydraulic motors and single acting cylinders, as well as multi- function circuits with external valving.

Bi-directional units are commonly used to operate double acting cylinders and reversible motors.

We look forward to working with you on your specific applications. As pioneers and specialists in the design and manufacture of high quality compact hydraulic systems, we are well qualified to offer practical and economical solutions to your fluid power problems.

Your local Parker sales representative will be pleased to provide further information.

Features

- 1 hp, 12 vdc motor
- 3 pump sizes
- Variety of circuits
- Many reservoir choices
- 241 bar (3500 psi) capability
- Soft seat load hold valves
- Vertical and horizontal mounting

Typical Applications

- Wheelchair lifts
- Scissors lift tables
- RV levelers
- RV room slides
- Cab tilts
- Mobile sign lifts
- Boat lifts
- Pallet movers
- Yours?

Parker Hannifin Corporation
Oildyne Division
Minneapolis, MN 55428 USA

Standard Product Ordering Code

165 | AY | [ ] | [ ] – [ ] | [ ] – [ ] | [ ] – [ ] – [ ]

165 POWER UNIT
- includes relief valve(s)

MOTOR CODE
AY 12 vdc, 1 hp Perm. Magnet

PUMP TYPE
S Standard
C Cold Temp

PUMP SIZE
32 .032 CIPR
50 .050 CIPR
65 .065 CIPR

RESERVOIR
C 26 cu. in. usable
D Altern. orient. C
G 46 cu. in. usable
H 1/2 gal. usable (metal)
I 1 gal. usable (metal)
J 1-1/2 gal. usable (metal)
P 1/4 gal. usable (plastic)
Q 1/2 gal. usable (plastic)
R 1 gal. usable (plastic)
S 3/4 gal. usable (plastic)

NOTE: C and D reservoirs are available as Vertical Mount ONLY

CIRCUIT TYPE
NN Single direction
WW Single dir. with check
RR Reversible
LL Reversible locking
RB Reversible with Back Press.
LB Rev. lock. with Back Press.
Each Solenoid Valve option below includes the WW circuit:
S1 12 vdc, Normally Closed
S2 24 vdc, Normally Closed
S5 12 vdc, Normally Open
S6 24 vdc, Normally Open

PORTS
1 7/16-20 (SAE -4)
4 1/8" Pipe (BSPP)

MOUNTING
V Vertical (motor up)
H Horizontal

UP RV SETTING
(Left Hand Port)
In multiples of 100 psi
Examples
04 = 400 psi
12 = 1200 psi
29 = 2900 psi

DN RV SETTING
(Right Hand Port)
If Single Direction circuit use **00**
In multiples of 100 psi
Examples
04 = 400 psi
12 = 1200 psi
29 = 2900 psi

ORDERING CODE INSTRUCTIONS

Select the model code needed based on catalog information. All boxes above must be filled in before Oildyne can process the order. If the power unit is a single direction unit use '00' for the DN (Right Hand) relief valve box.

Hydraulic Fluid

ATF, OD18, or other clean hydraulic oil with a viscosity of 150 to 300 SUS at 38°C (100°F) is acceptable. If another type of fluid is needed, please consult the factory.

Temperature Range

Normal operating range is +20°F to +140°F. Please review your application with the factory for uses below -7°C and over +60°C (+20°F and over +140°F).

ALL DATA SUBJECT TO CHANGE WITHOUT NOTICE
FOR POWER UNIT CONFIGURATIONS OTHER THAN THOSE SHOWN PLEASE CONSULT OILDYNE.

Parker Hannifin Corporation
Oildyne Division
Minneapolis, MN 55428 USA

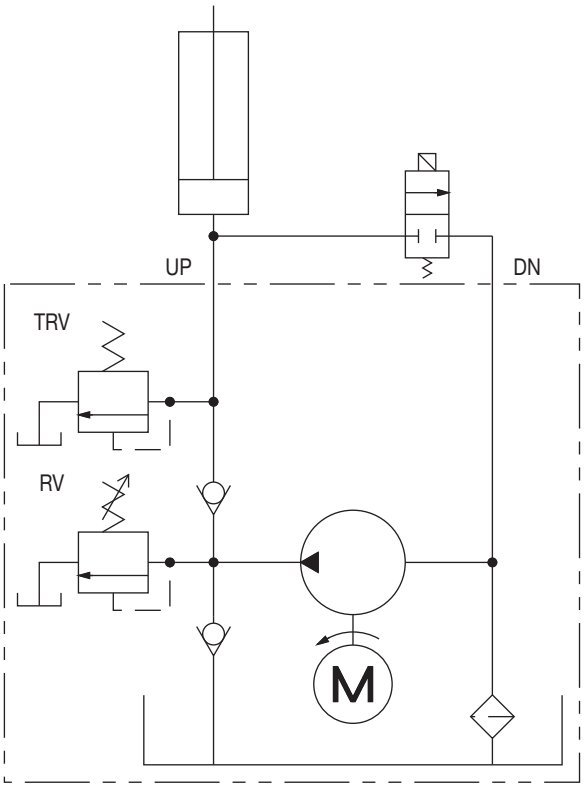

"WW" CIRCUIT

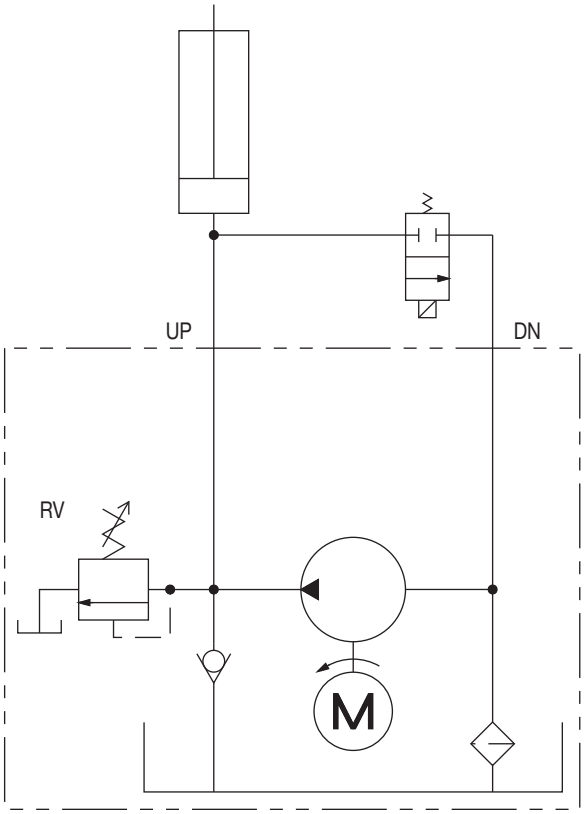

"NN" CIRCUIT

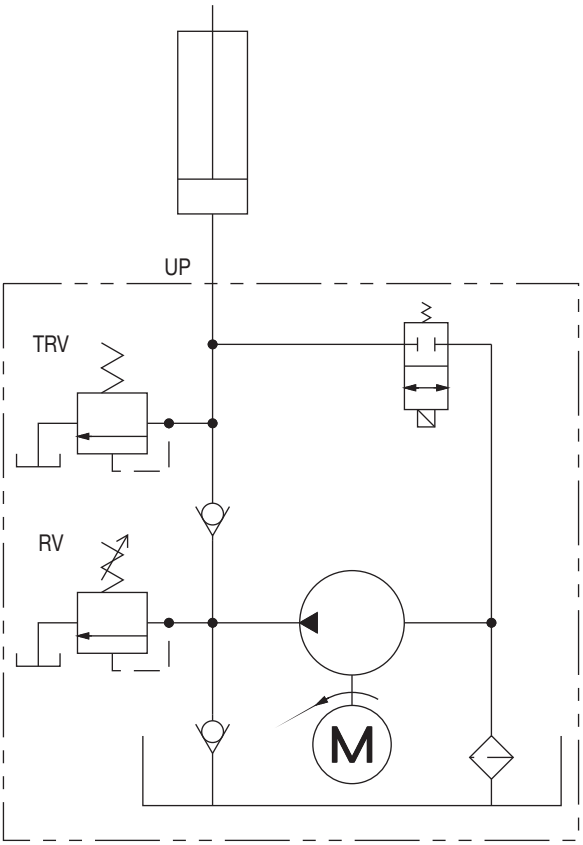

"S*" CIRCUIT

Thermal Relief Valves—Why?

The thermal relief valve's (TRV) purpose is to allow a bleed off of built up pressure due to thermal expansion of the fluid or to act as a (limited) shock load protection, should a cylinder in the system get bumped.

The thermal relief valve is included in circuits using a pilot operated check valve. The single direction units get one; the reversing units get two. It is located between the check valve and the 165 Series pump outlet port. It is a fixed relief valve with a pressure setting approximately 100-140 bar (1500-2000 psi) above the system relief valve pressure.

Parker Hannifin Corporation
Oildyne Division
Minneapolis, MN 55428 USA

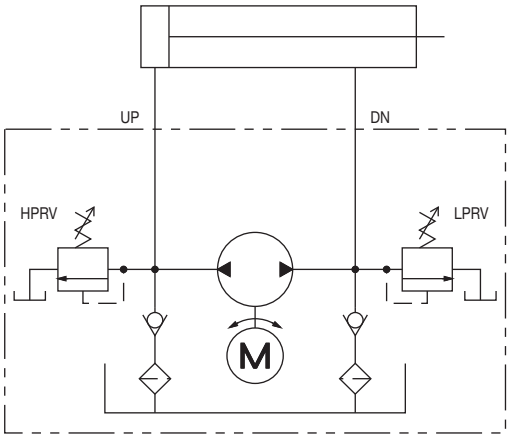

"RR" CIRCUIT

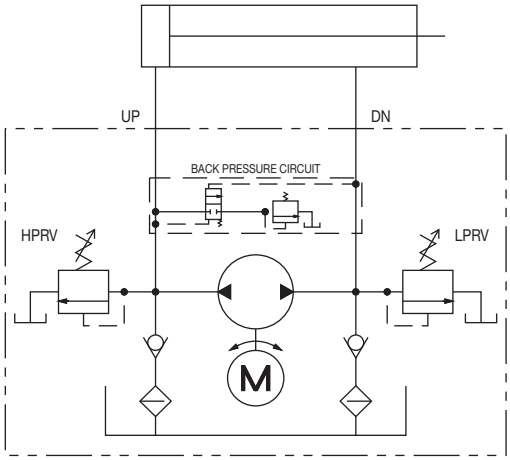

"RB" CIRCUIT

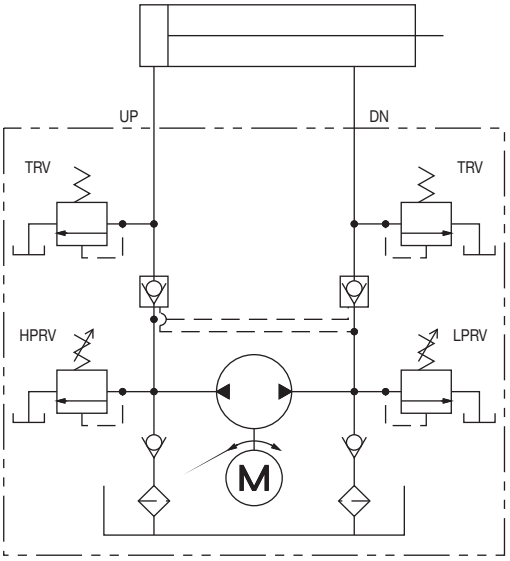

"LL" CIRCUIT

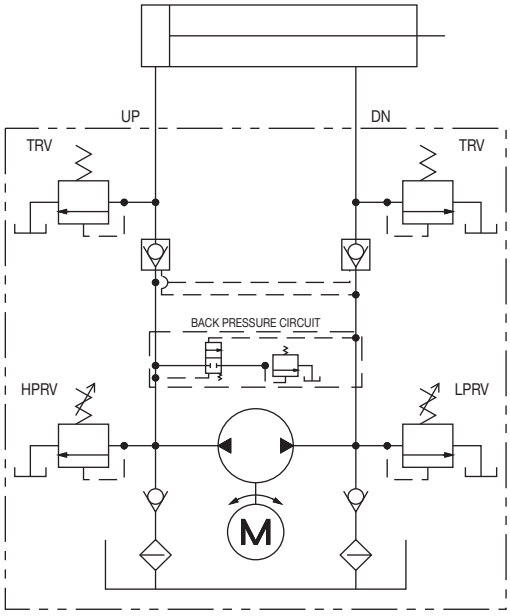

"LB" CIRCUIT

Back Pressure Circuits—Why?

The basic reversible circuit is essentially a closed loop. The oil returning from the system is fed back into the pump inlet. When a cylinder is being retracted more oil is being returned to the power unit than is leaving it due to the rod volume. This results in the DN side relief valve cracking open allowing the rod volume of oil to go back to the tank. The larger the rod volume the more open the relief valve will be. In many applications this is not a problem. However, if work is being done on the retract stroke, or if a pressure switch is used to signal the cylinder is fully retracted, the back pressure circuit is required. This circuit allows the rod volume of oil to return to the reservoir through a special shuttle spool, before it reaches the pump. Full relief valve pressure is then available to retract the cylinder, also preventing a pressure switch from tripping before the full retract position is achieved.

Recommended uses:

- In systems where work is being done on the retract stroke
- Where a pressure switch is used to signal the full retract position
- In systems requiring a faster retract than extend speed

Parker Hannifin Corporation
Oildyne Division
Minneapolis, MN 55428 USA

Dimensions

Shown with “G” reservoir

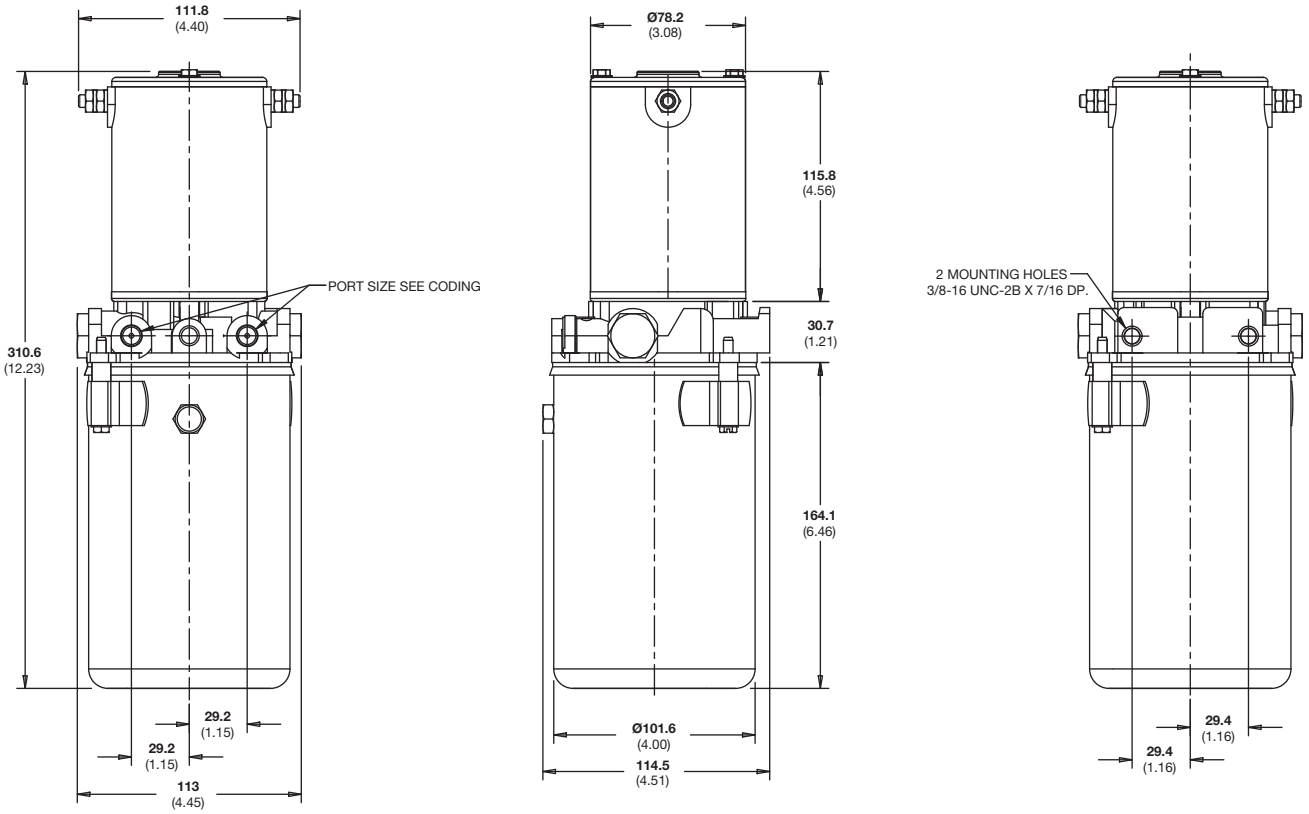

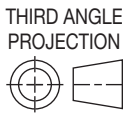

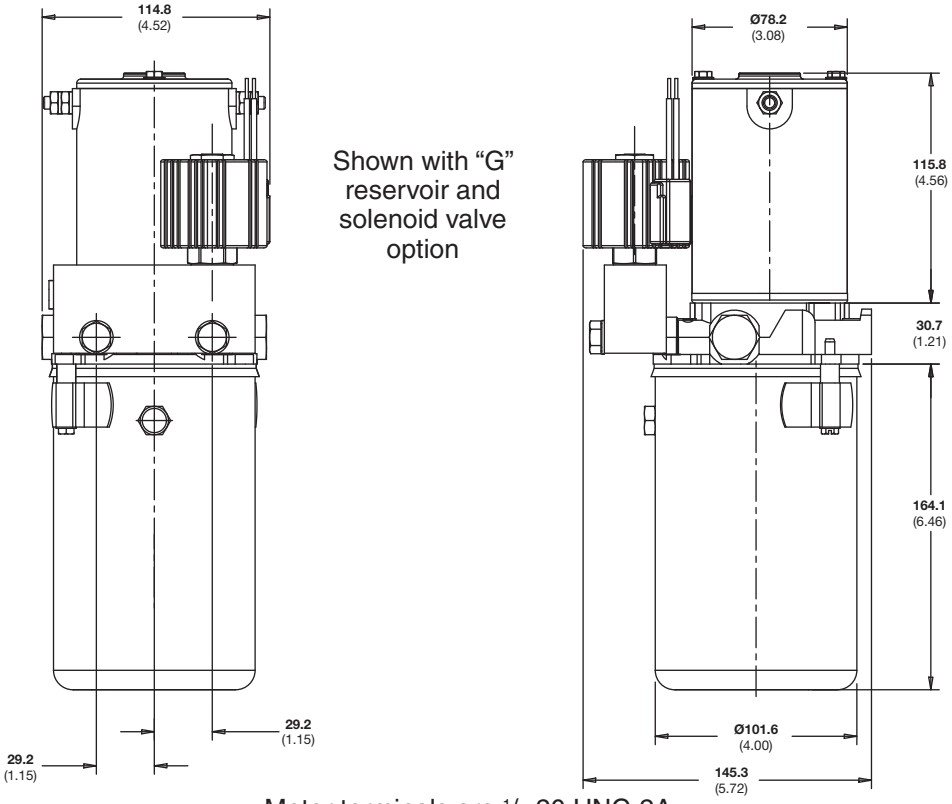

Shown with “G” reservoir and solenoid valve option

Motor terminals are $^1/_4$-20 UNC-2A.

Note: All dimensions in **mm** (inches).

Parker Hannifin Corporation
Oildyne Division
Minneapolis, MN 55428 USA

Dimensions

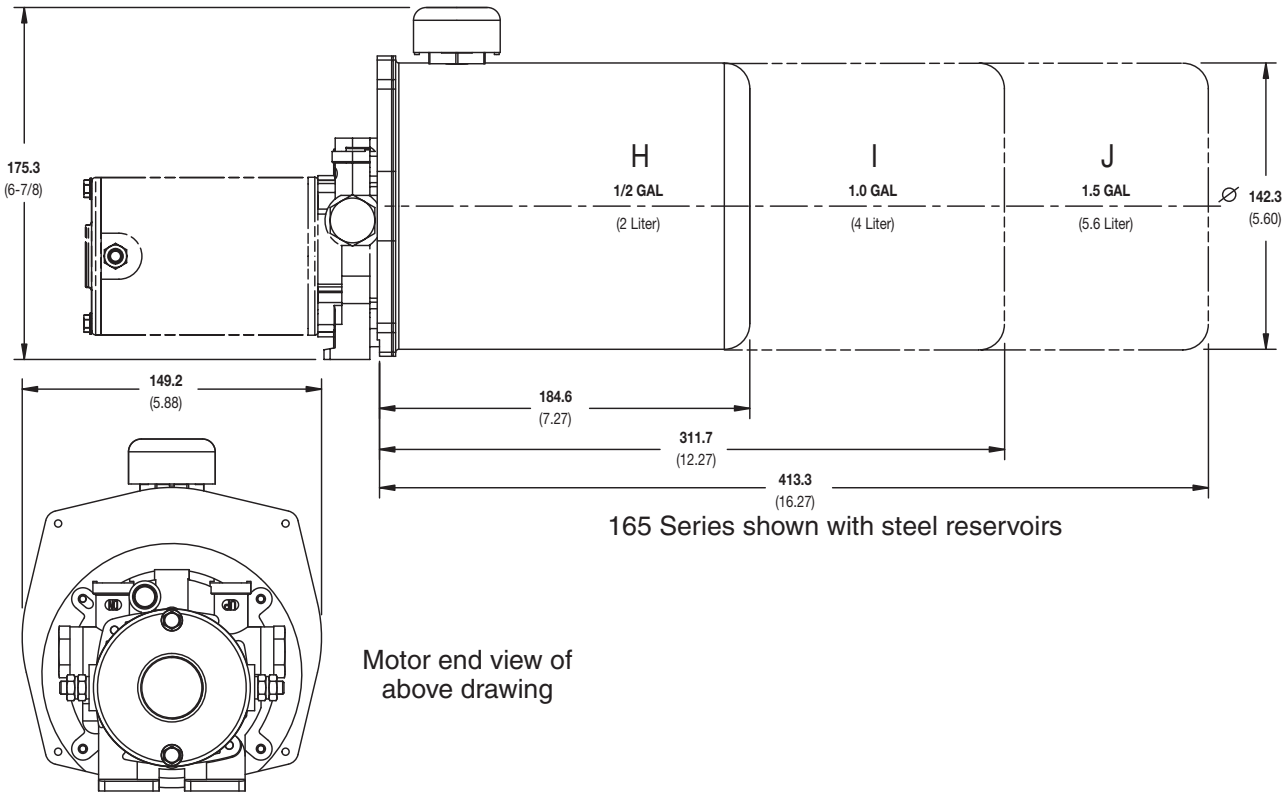

165 Series shown with steel reservoirs

Motor end view of above drawing

165 Series shown with plastic reservoirs

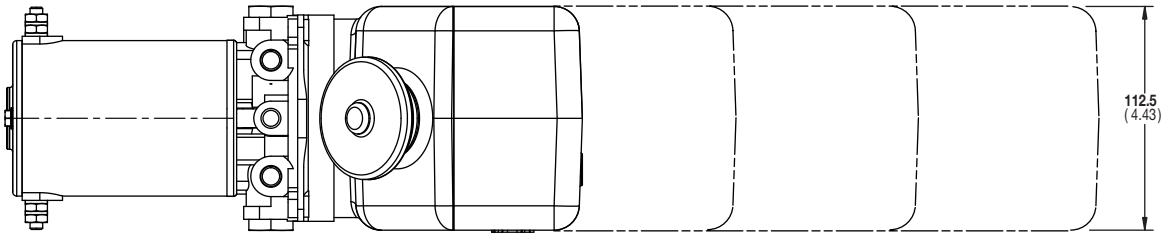

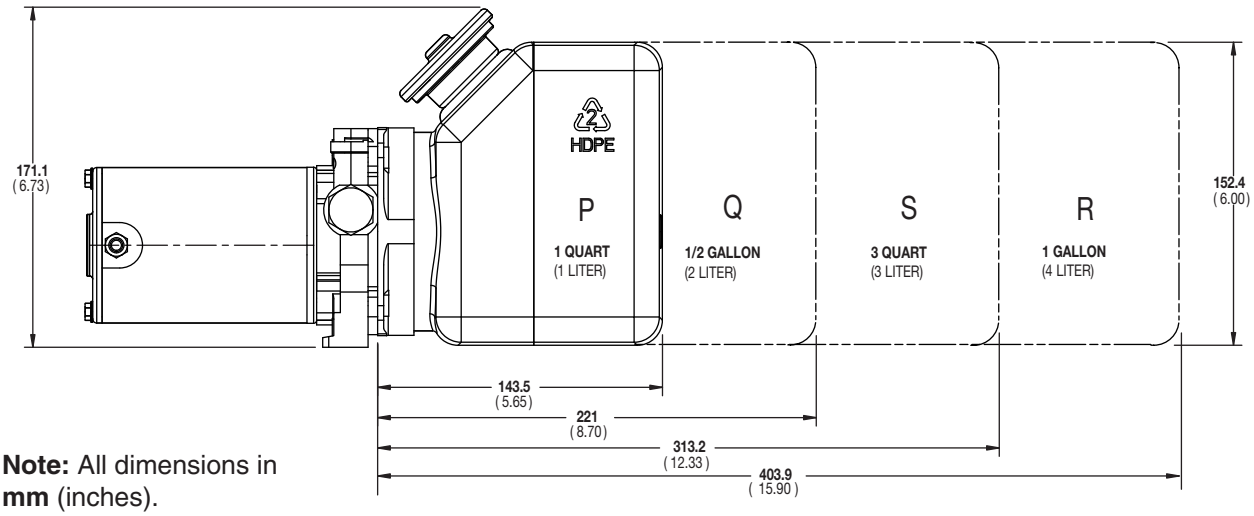

Note: All dimensions in **mm** (inches).

Parker Hannifin Corporation
Oildyne Division
Minneapolis, MN 55428 USA

Performance data based on ATF @ 21°C (70°F)

165 Series Performance

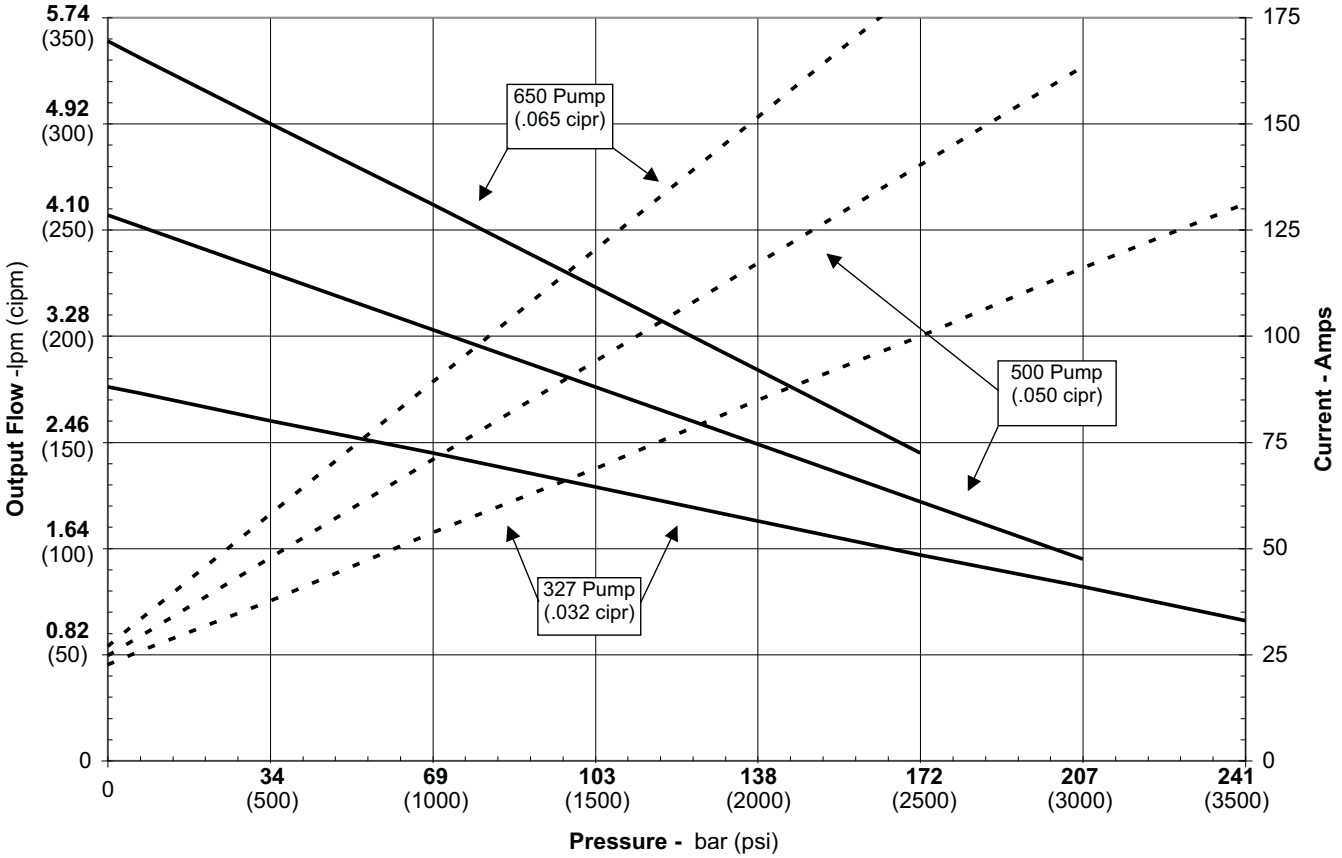

"AY" Wiring Diagram
-Single Direction

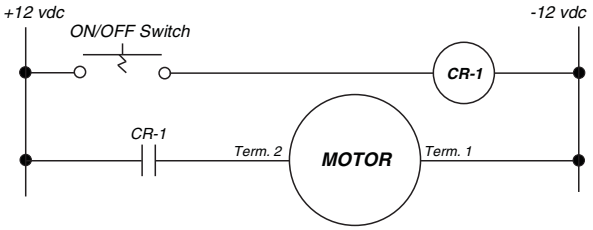

"AY" Wiring Diagram
-Reversible

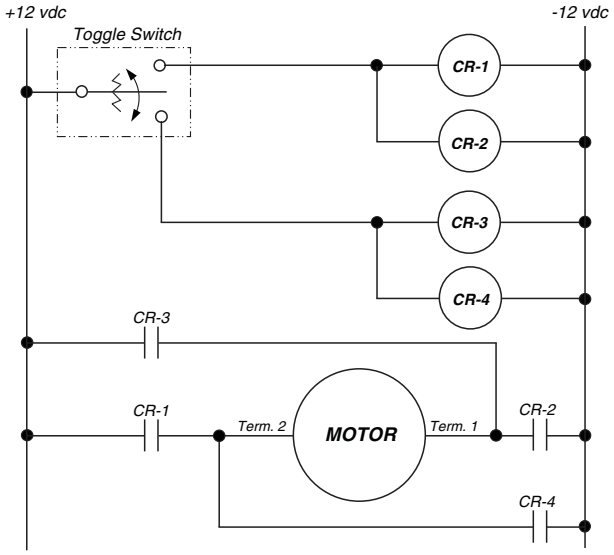

Note: Performance data is for reference only

Parker Hannifin Corporation
Oildyne Division
Minneapolis, MN 55428 USA

Oildyne

550 Series Hydraulic Power Units

Pressures to 207 bar (3000 psi)
Flows to 11.4 lpm (3 gpm)

550 Series Hydraulic Power Units

We are pleased to introduce our new 550 Series AC hydraulic power units. The 550 Series combines the features and benefits our customers and markets have requested in a durable and economical package.

The integral motor, pump and reservoir are complemented with a full line of Parker D03 and cartridge valve options. Add a linear or rotary actuator and you have a complete hydraulic system solution for your application.

These high quality power units are ideal for industrial machine tool clamping circuits, dock levelers, food processing, hose crimping, scissor lift, presses, and a myriad of AC applications. Let them go to work for you.

Your local Parker sales representative will be pleased to provide further information.

Features

- Numerous motors up to 3 hp
- 6 pump sizes – flows from 1 to 11.4 lpm ($^1/_4$ to 3 gpm)
- Externally adjustable relief valve
- Variety of reservoirs
- 207 bar (3000 psi) capability
- D03 pad or standard P and T ports

Typical Applications

- Machine tool clamping
- Dock levelers
- Man lifts
- Scissors lifts
- Wheelchair lifts
- Trash compactors
- Hose crimpers
- Boat lifts
- Presses
- Commercial ovens

Parker Hannifin Corporation
Oildyne Division
Minneapolis, MN 55428 USA

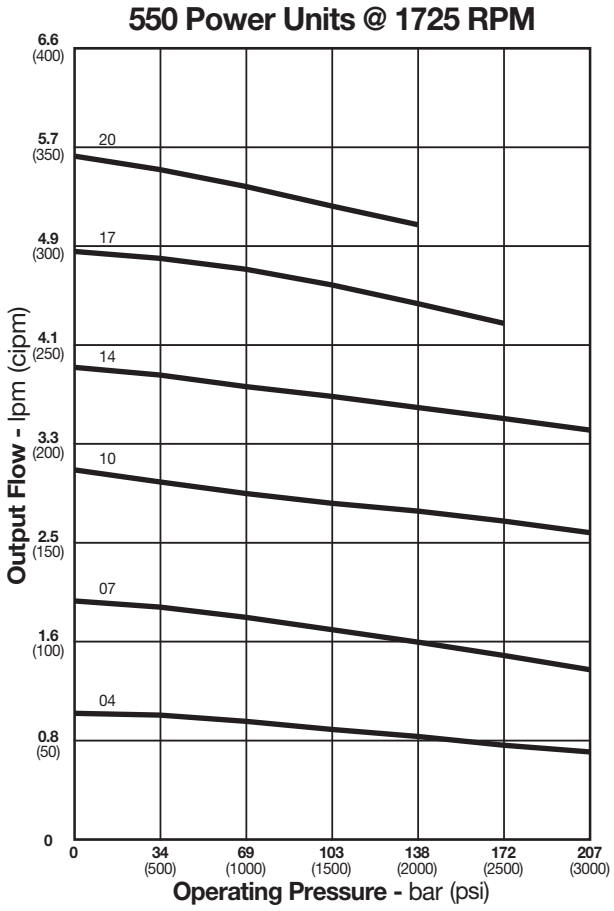

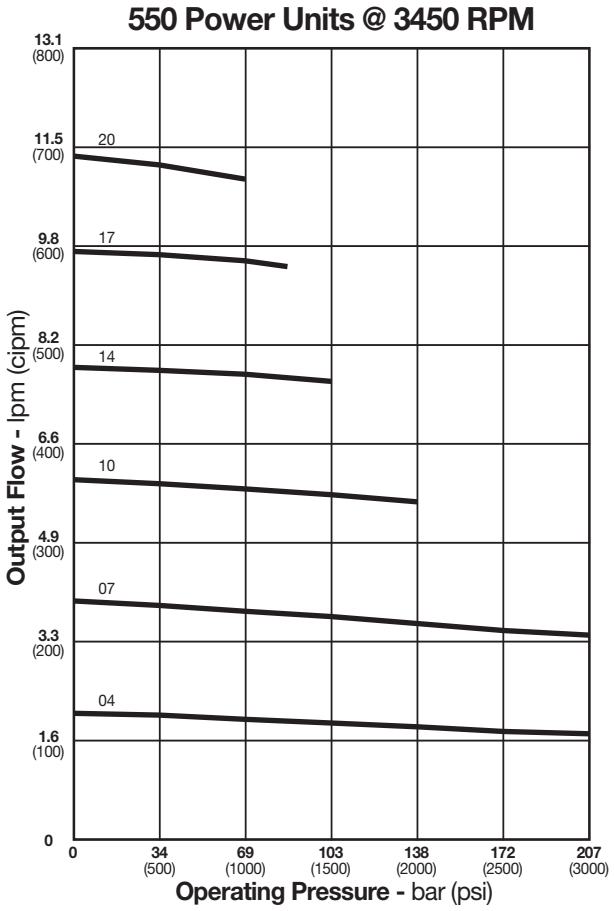

Performance data based on ATF @ 21°C (70°F)

Motor Horsepower Recommendations at Flow/Pressure

Pump Size	Nominal GPM @1725	Nominal GPM @3450	Pressure (PSI) 500	1000	1500	2000	2500	3000
04	¼		.50 HP	.50 HP	.50 HP	.50 HP	.50 HP	.50 HP
04		½	.50 HP	.50 HP	.50 HP	.75 HP	1.0 HP	1.0 HP
07	½		.50 HP	.50 HP	.50 HP	.75 HP	1.0 HP	1.0 HP
07		1	.50 HP	.75 HP	1.0 HP	1.5 HP	2.0 HP	2.0 HP
10	¾		.50 HP	.50 HP	.75 HP	1.0 HP	1.5 HP	1.5 HP
10		1½	.50 HP	1.0 HP	1.5 HP	2.0 HP	3.0 HP	3.0 HP
14	1		.50 HP	.75 HP	1.0 HP	1.5 HP	2.0 HP	2.0 HP
14		2	.75 HP	1.5 HP	2.0 HP	3.0 HP		
17	1¼		.50 HP	1.0 HP	1.5 HP	2.0 HP	2.0 HP	
17		2½	1.0 HP	2.0 HP	3.0 HP			
20	1½		.50 HP	1.0 HP	1.5 HP	2.0 HP		
20		3	1.0 HP	2.0 HP	3.0 HP			

Note: Performance data is for reference only

Parker Hannifin Corporation
Oildyne Division
Minneapolis, MN 55428 USA

Standard Product Ordering Code

550 [ ] [ ] — [ ] — [ ] —

550 POWER UNIT
- includes relief valve

MOTOR SELECTION - TEFC
Single Phase = 115/230 VAC, 60 HZ
Three Phase = 230/460 VAC, 60 HZ

CODE	HP	RPM	PHASE
TC	.50	1725	Single
TD	.50	1725	Three
TM	.50	3450	Single
TT	.50	3450	Three
TE	.75	1725	Single
TF	.75	1725	Three
TN	.75	3450	Single
TU	.75	3450	Three
TJ	1.0	1725	Single
TK	1.0	1725	Three
TP	1.0	3450	Single
TW	1.0	3450	Three
TL	1.5	1725	Single
TO	1.5	1725	Three
TQ	1.5	3450	Single
TX	1.5	3450	Three
TV	2.0	1725	Single
TR	2.0	1725	Three
TS	2.0	3450	Single
TY	2.0	3450	Three
TH	3.0	3450	Three

PUMP SIZE

CODE	DISPLACEMENT
04	.04 CIPR
07	.07 CIPR
10	.10 CIPR
14	.14 CIPR
17	.17 CIPR
20	.20 CIPR

RESERVOIR

CODE	VOLUME
05	0.5 Gal. Steel
10	1.0 Gal. Steel
15	1.5 Gal. Steel
50	5.0 Gal. Steel
06	0.5 Gal. Plastic
11	1.0 Gal. Plastic
16	1.5 Gal. Plastic
26	2.5 Gal. Plastic

Note: 5 gal. steel reservoir can be mounted vertically only. All others are vertical and horizontal ready

CIRCUIT

CODE	DESCRIPTION
D0	D03 Pad & Extension Fittings
D1	D03 Pad with Dual PO Check Manifold (Manapak) (for use with D03 Directional Control Valves)
SA	Standard Pressure & Tank Ports
SW	Std P & T Ports with Outlet Port Check Valve

Two Position Two Way Cartridge Valves
Following circuits include outlet port check valve:

S1	12 VDC, Normally Closed, Conduit Connector
S2	24 VDC, Normally Closed, Conduit Connector
S3	120 VAC, Normally Closed, Conduit Connector
S4	240 VAC, Normally Closed, Conduit Connector
S5	12 VDC, Normally Open, Conduit Connector
S6	24 VDC, Normally Open, Conduit Connector
S7	120 VAC, Normally Open, Conduit Connector
S8	240 VAC, Normally Open, Conduit Connector
P1	12 VDC, Normally Closed, DIN Connector
P2	24 VDC, Normally Closed, DIN Connector
P3	120 VAC, Normally Closed, DIN Connector
P4	240 VAC, Normally Closed, DIN Connector
P5	12 VDC, Normally Open, DIN Connector
P6	24 VDC, Normally Open, DIN Connector
P7	120 VAC, Normally Open, DIN Connector
P8	240 VAC, Normally Open, DIN Connector

Parker Hannifin Corporation
Oildyne Division
Minneapolis, MN 55428 USA

RV SETTING
In multiples of 100 psi
Examples
04 = 400 psi
12 = 1200 psi
29 = 2900 psi

FLOW CONTROL
(for use with Cartridge Valves)

CODE	DESCRIPTION
NN	None (use with D0 and D1 circuits)
HP	None (use with all other circuits)
F1	Press. Comp., .5 to 1.0 GPM
F2	Press. Comp., 1.0 to 2.0 GPM

4-WAY VALVE (ALL D03 SIZE)

CODE	DESCRIPTION **(For use only with Circuit Codes D0 and D1)**
NNN	No 4-Way Valve Included
01Y	Closed Center, 120 VAC, Conduit Connectors
01T	Closed Center, 240 VAC, Conduit Connectors
01K	Closed Center, 12 VDC, Conduit Connectors
01J	Closed Center, 24 VDC, Conduit Connectors
02Y	Open Center, 120 VAC, Conduit Connectors
02T	Open Center, 240 VAC, Conduit Connectors
02K	Open Center, 12 VDC, Conduit Connectors
02J	Open Center, 24 VDC, Conduit Connectors
07Y	Float Center, 120 VAC, Conduit Connectors
07T	Float Center, 240 VAC, Conduit Connectors
07K	Float Center, 12 VDC, Conduit Connectors
07J	Float Center, 24 VDC, Conduit Connectors
08Y	Tandem Center, 120 VAC, Conduit Connectors
08T	Tandem Center, 240 VAC, Conduit Connectors
08K	Tandem Center, 12 VDC, Conduit Connectors
08J	Tandem Center, 24 VDC, Conduit Connectors
30Y	Single Solenoid, 120 VAC, Conduit Connector
30T	Single Solenoid, 240 VAC, Conduit Connector
30K	Single Solenoid, 12 VDC, Conduit Connector
30J	Single Solenoid, 24 VDC, Conduit Connector
Y01	Closed Center, 120 VAC, Hirschmann w/out Plugs
T01	Closed Center, 240 VAC, Hirschmann w/out Plugs
K01	Closed Center, 12 VDC, Hirschmann w/out Plugs
J01	Closed Center, 24 VDC, Hirschmann w/out Plugs
Y02	Open Center, 120 VAC, Hirschmann w/out Plugs
T02	Open Center, 240 VAC, Hirschmann w/out Plugs
K02	Open Center, 12 VDC, Hirschmann w/out Plugs
J02	Open Center, 24 VDC, Hirschmann w/out Plugs
Y07	Float Center, 120 VAC, Hirschmann w/out Plugs
T07	Float Center, 240 VAC, Hirschmann w/out Plugs
K07	Float Center, 12 VDC, Hirschmann w/out Plugs
J07	Float Center, 24 VDC, Hirschmann w/out Plugs
Y08	Tandem Center, 120 VAC, Hirschmann w/out Plugs
T08	Tandem Center, 240 VAC, Hirschmann w/out Plugs
K08	Tandem Center, 12 VDC, Hirschmann w/out Plugs
J08	Tandem Center, 24 VDC, Hirschmann w/out Plugs
Y30	Single Solenoid, 120 VAC, Hirschmann w/out Plug
T30	Single Solenoid, 240 VAC, Hirschmann w/out Plug
K30	Single Solenoid, 12 VDC, Hirschmann w/out Plug
J30	Single Solenoid, 24 VDC, Hirschmann w/out Plug

Hydraulic Fluid

Any clean hydraulic oil with a viscosity of 150 to 300 SUS at 38°C (100°F) is acceptable. If another type of fluid is needed, please consult the factory.

Temperature Range

Normal operating range is -7°C to 60°C (+20°F to +140°F). Please consult the factory for applications outside this range.

Parker Hannifin Corporation
Oildyne Division
Minneapolis, MN 55428 USA

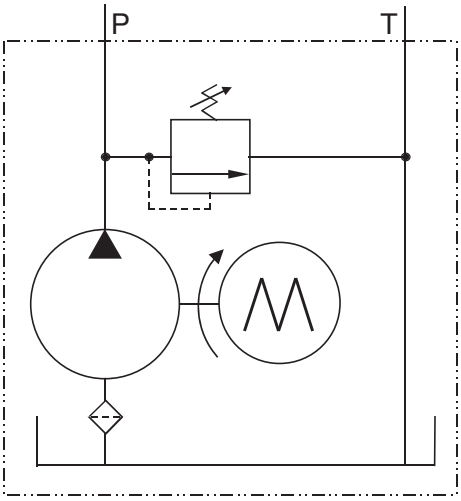

"SA" CIRCUIT

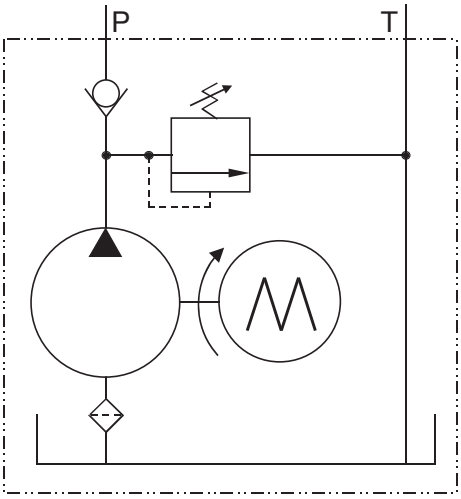

"SW" CIRCUIT

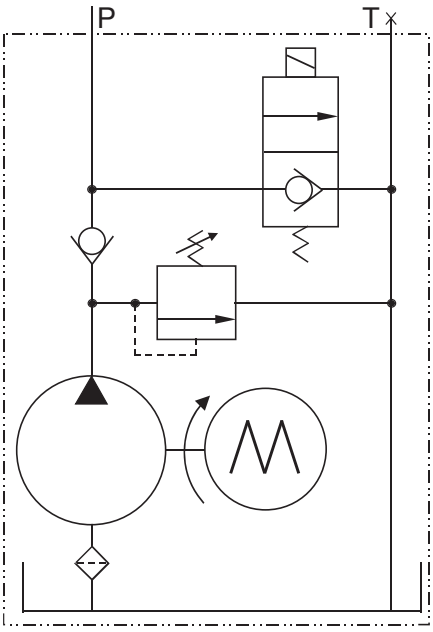

"S1-S4, P1-P4" CIRCUITS

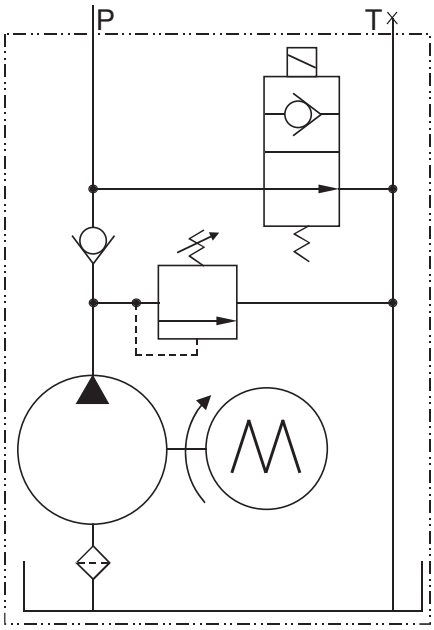

"S5-S8, P5-P8" CIRCUITS

Parker Hannifin Corporation
Oildyne Division
Minneapolis, MN 55428 USA

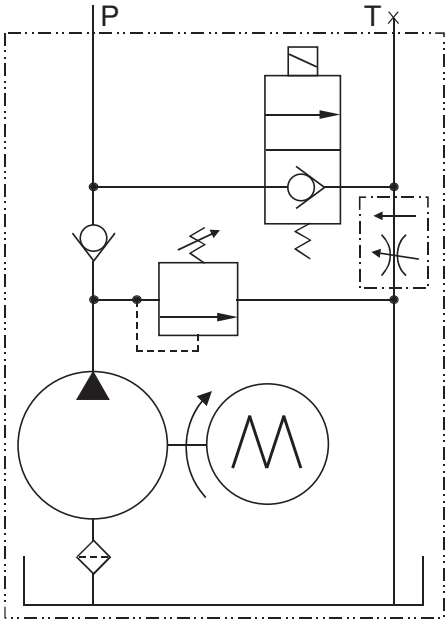

"S1-S4, P1-P4" CIRCUITS WITH PRESSURE COMPENSATED FLOW CONTROL F1 OR F2

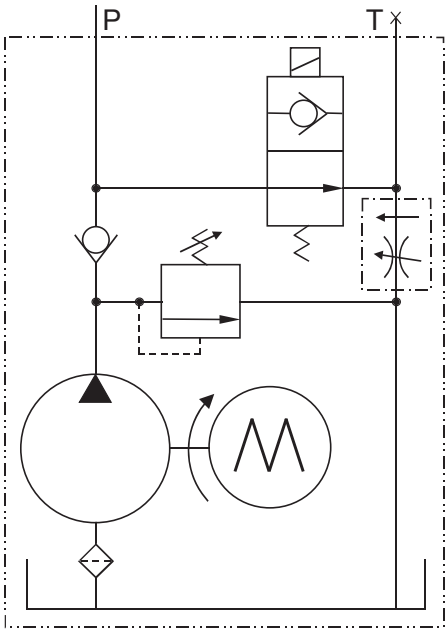

"S5-S8, P5-P8" CIRCUITS WITH PRESSURE COMPENSATED FLOW CONTROL F1 OR F2

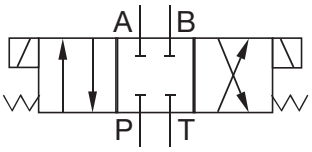

CLOSED CENTER

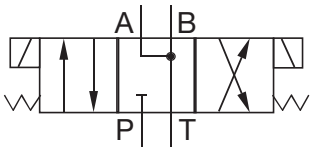

FLOAT CENTER

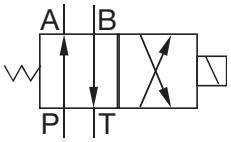

SINGLE SOLENOID

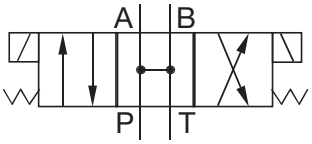

OPEN CENTER

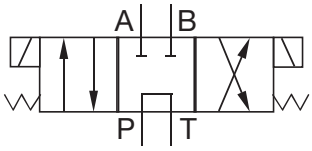

TANDEM CENTER

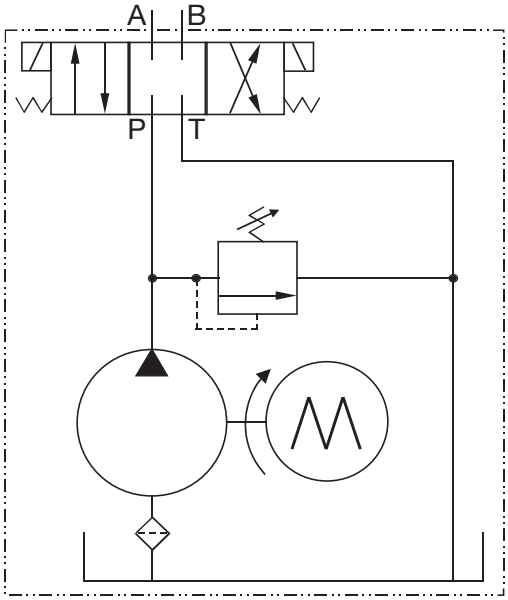

"D0" CIRCUIT (D03 VALVE TO BE SELECTED)

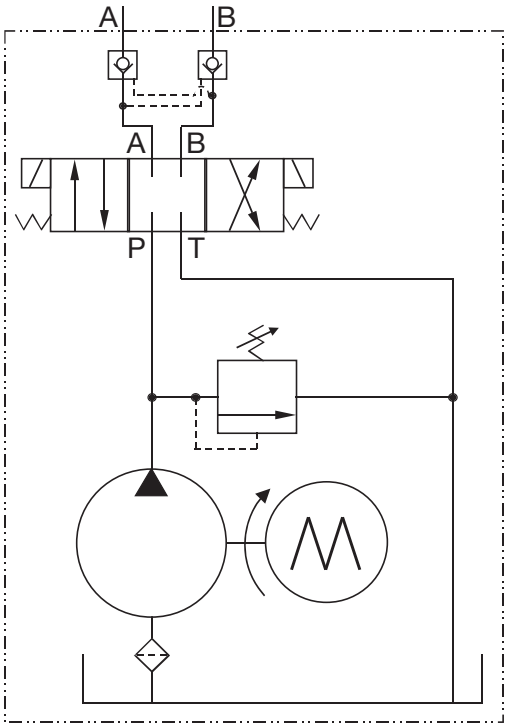

"D1" CIRCUIT INCLUDES MANAPAK DUAL P0 CHECK VALVE (D03 VALVE TO BE SELECTED)

Parker Hannifin Corporation
Oildyne Division
Minneapolis, MN 55428 USA

Dimensions

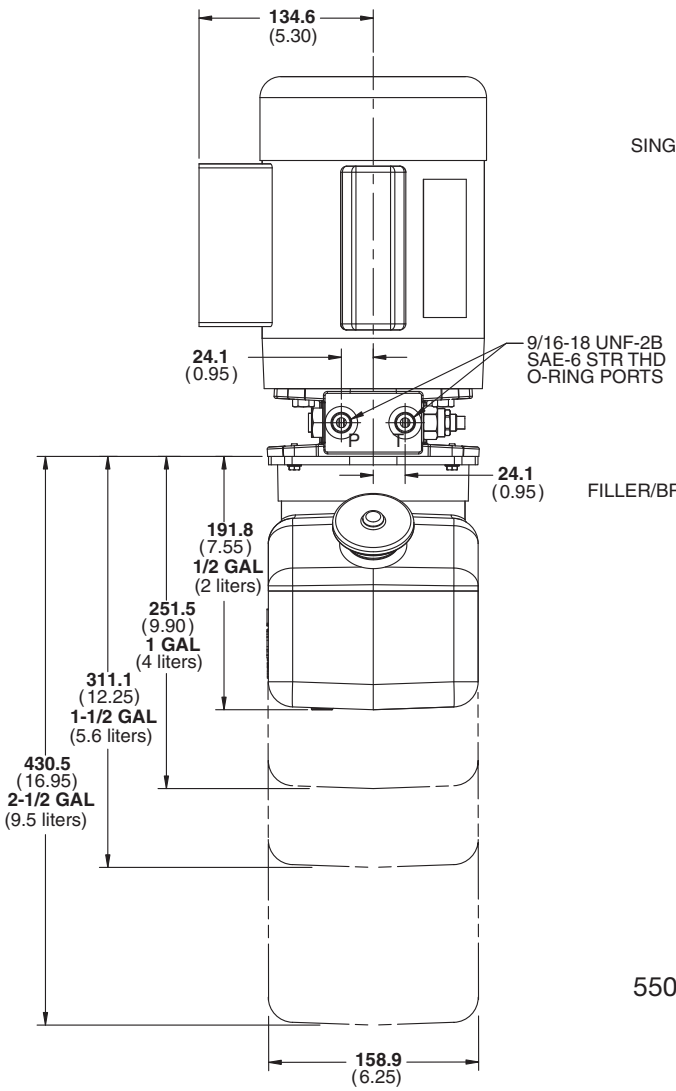

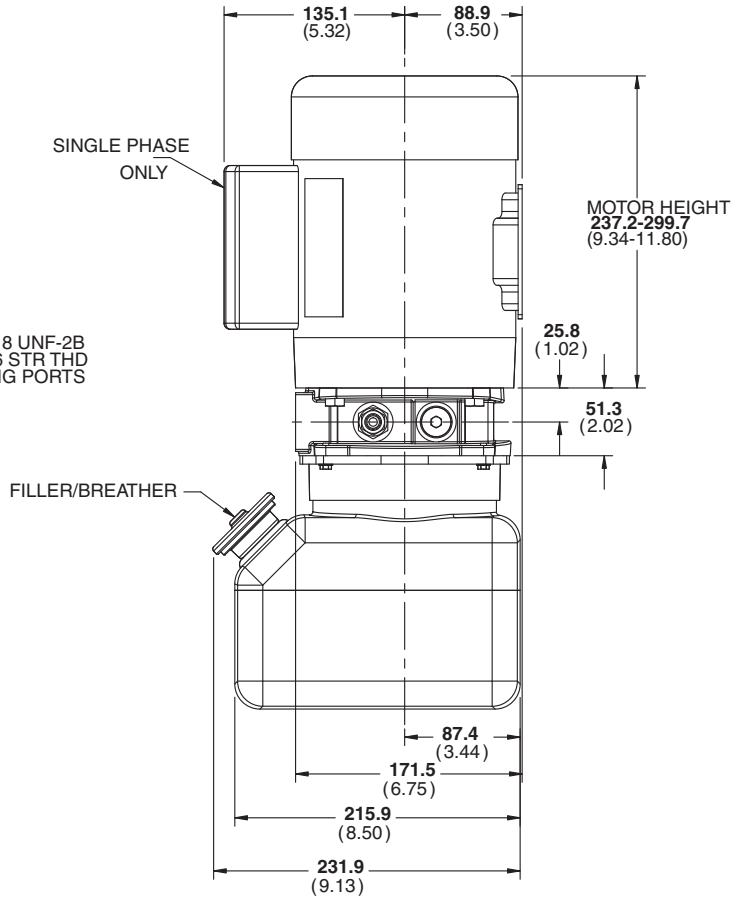

550 Series shown with P and T ports and plastic reservoir

Note: When mounted in the horizontal configuration the 2½ gallon plastic reservoir must be supported

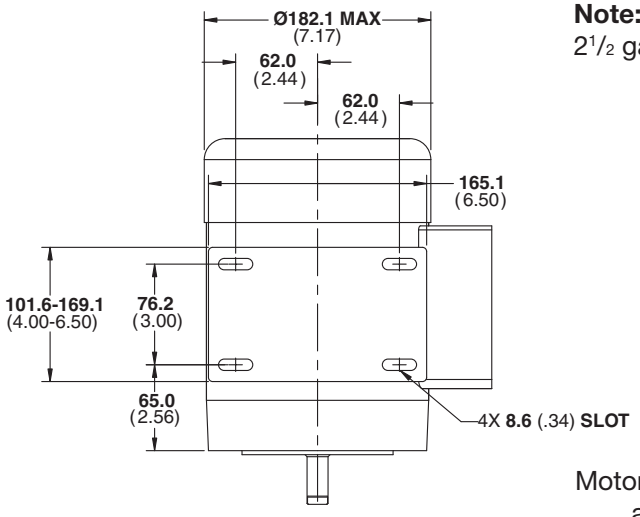

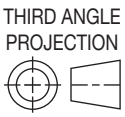

Motor foot dimensions are common to all 550 Series electric motors

Note: All dimensions in **mm** (inches).

Parker Hannifin Corporation
Oildyne Division
Minneapolis, MN 55428 USA

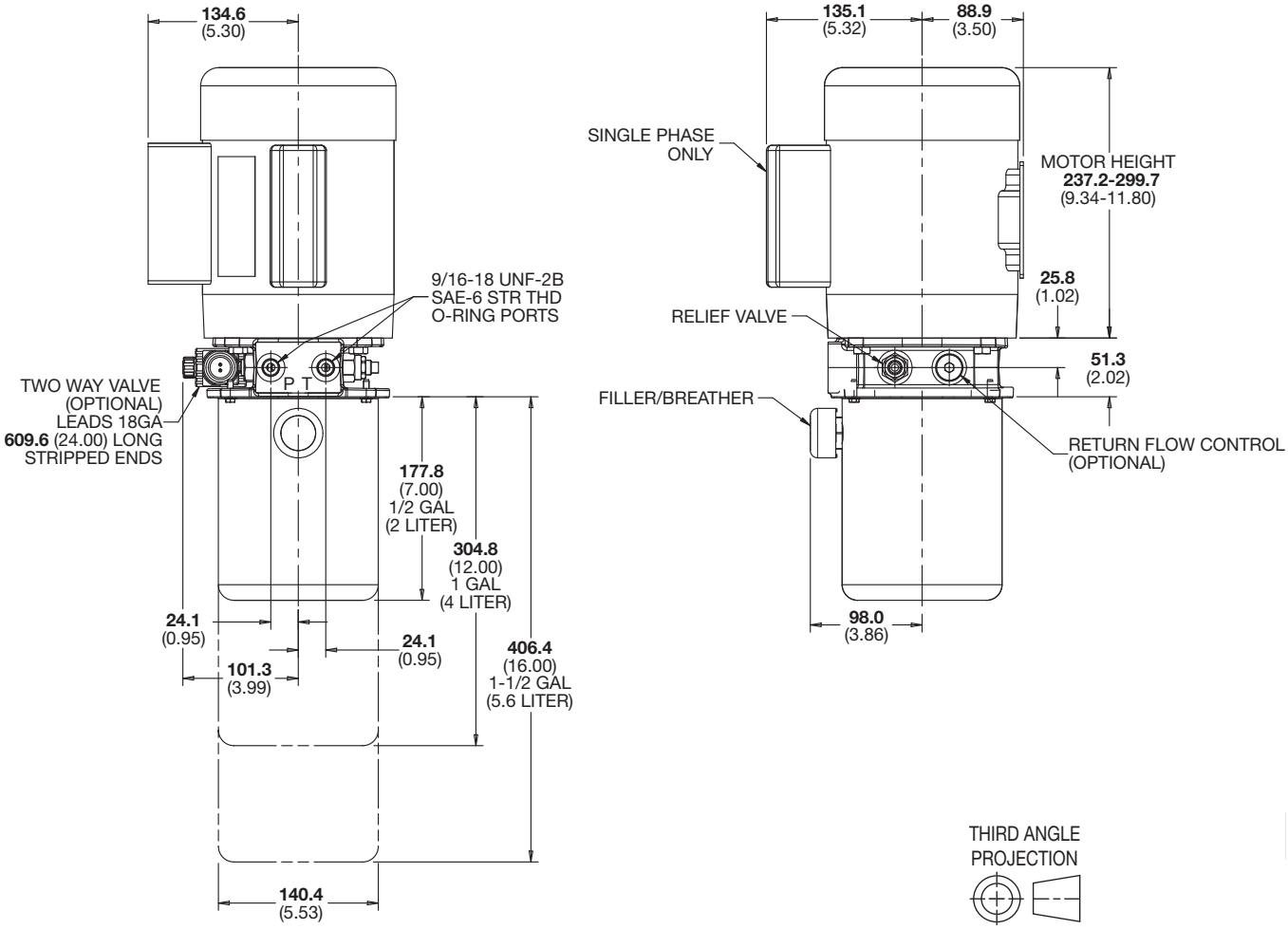

550 Series shown with optional solenoid
2-way valve and steel reservoirs

Note: All dimensions in **mm** (inches).

Parker Hannifin Corporation
Oildyne Division
Minneapolis, MN 55428 USA

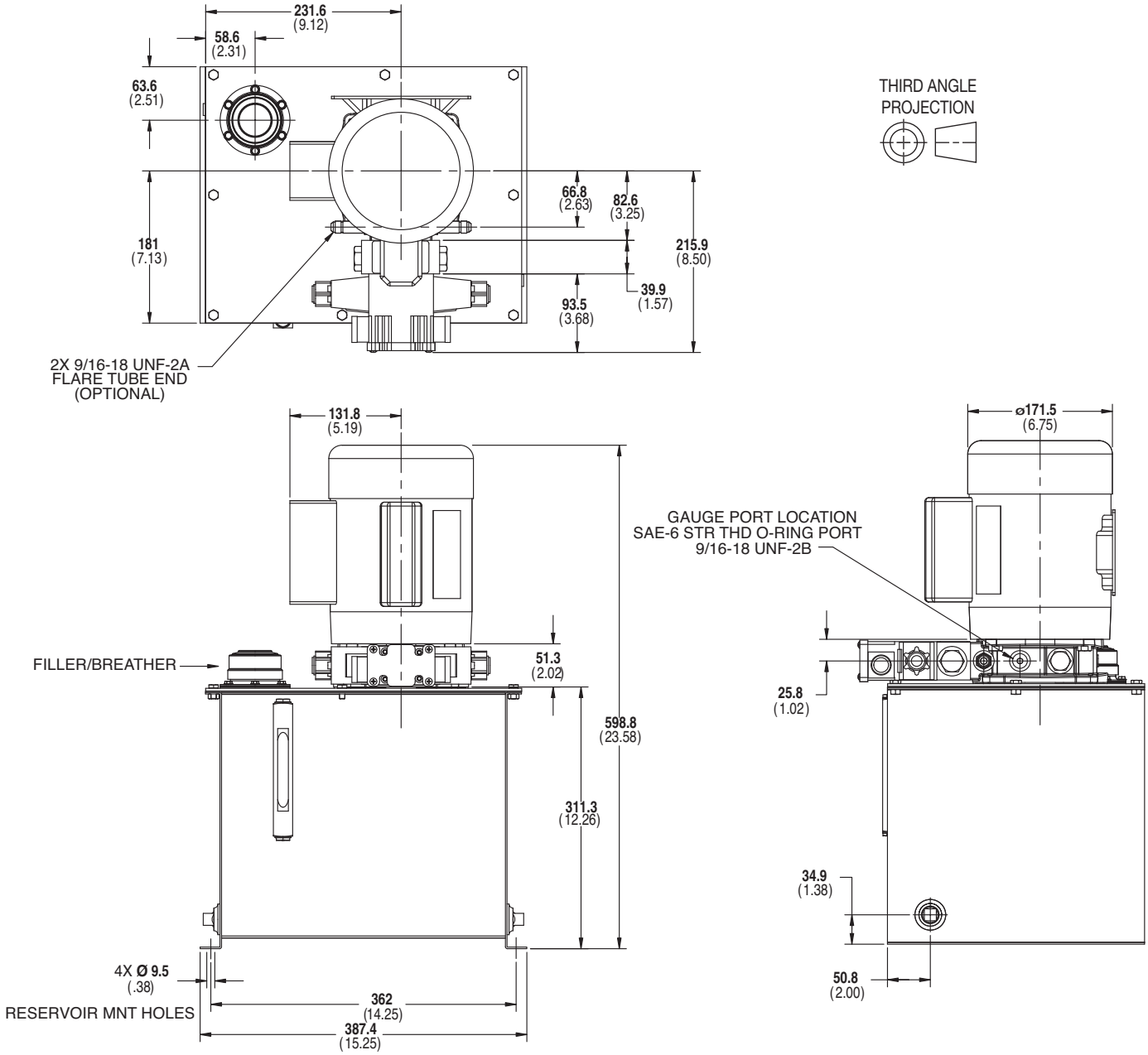

550 Series shown with D03 valve, Manapak block and 5 gallon reservoir

Note: All dimensions in **mm** (inches).

Parker Hannifin Corporation
Oildyne Division
Minneapolis, MN 55428 USA