aerospace
climate control
electromechanical
filtration
fluid & gas handling
hydraulics
pneumatics
process control
sealing & shielding

Oil Conditioning Unit

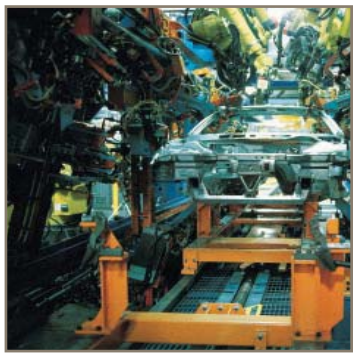

ENGINEERING YOUR SUCCESS.

Oil Conditioning Unit

Applications

The Parker Oil Conditioning Units (OCU) are a family of off-line filtration packages designed to effectively remove water or particulate contamination from hydraulic and lube system fluids. The high performance, high capacity design enables the efficient removal of the very fine contaminants that cause premature wear in expensive hydraulic components. In addition, the precursors to varnish are also reduced or eliminated completely.

The compact, user-friendly OCUs are a cost effective method to reduce system contamination while helping to insure the reliability of your hydraulic or lube system.

- **Aviation**
  - ground support equipment
  - simulators
- **Power Generation**
  - steam and gas turbine hydraulic and lubrication
- **Automotive**
  - presses
  - stamping equipment
- **Steel Mills**
  - rolling mills
  - continuous casters
  - sheet mills
- **Injection Molding**
  - hydraulic circuits
- **Railway**
  - car assembly
  - wheel presses
- **Pulp & Paper**
  - machine lubrication
- **Construction**
  - timber harvesting
  - aerial lifts
  - excavators
- **Wind Power**
  - turbine generators
  - gear boxes
- **Oil & Gas**
  - hydraulic equipment

Plastic used in injection molding process

Oil Conditioning Unit

Technology

A card sleeve compresses the lower part of the element to increase the density and a non-woven cloth protects the base and stops particle migration.

The filter design allows the oil to flow under pressure through 114mm of engineered media with three distinct stages of filtration and water absorption.

The largest particles are retained in the top of the element (1), making for an excellent diagnostic tool. Smaller particles are trapped in the mid stage (2), and the smallest particles are trapped in the lower and most compressed part of the element (3).

The cellulose media allows water absorption of up to 200 milliliters within the filter, reducing the water concentration in oil to less than 100 parts per million.

Equally noteworthy is the efficiency of the media in removing resins, metals and oxidation products, all of which are extremely damaging to close-tolerance components.

Manufactured from a specifically engineered cellulose material wound onto a central core, the OCU combines filtration principles to achieve effective filtration – low flow, low pressure and depth loading axial filtration – flow direction from the top to the bottom.

Oil Conditioning Unit

Features and Benefits

- Solid Particle Filtration
- Water Absorption
- Sludge, Resin, and Oxidation Absorption

The Parker OCU Benefit

- Removing up to 99% of all Solid Contaminates
- Reducing the Water Concentration to Less than 100 ppm
- Eliminating Resins and Oxidation Products
- Longer Life for Hydraulic Components
- Significant Reduction of Oil Consumption and Oil Disposal Cost
- Low Cost Full Flow Filter Cartridges
- Reduce Equipment Downtime
- Reduce Operating Cost
- Increase Profit

Oil Conditioning Unit

Features and Benefits

Tool-less access and easy service via the T-handle.

The combination of chemically treated cellulose and synthetic layers of media presents a massive surface area to remove solid contamination and emulsified water. The result is both exceptional dirt holding capacity and removal of water concentration to less than 100 ppm.

The engineered base design at the bottom of the housing supports the element under high pressure and provides a channeled migration path for clean fluid to flow back into the primary stream.

The Oil Conditioning Unit is designed as a top load filter, but can be mounted at any angle using the heavy-duty mounting bracket.

The intricately channeled base provides a large footprint to fully support the element under pressure, ensuring uniform loading of the element. Ultra-clean oil flows through the channels into the clean oil stream.

OC1 and OC2

Element Performance

Model OC1			
Media Grade	**Part Number**		
		Capacity @ 25 PSID (1.7 Bar)	Capacity @ 50 PSID (3.5 Bar)
2 Micron	942650	16.2 grams	23.3 grams
10 Micron	942652	28 grams	44.3 grams

Model OC2			
Media Grade	**Part Number**		
		Capacity @ 25 PSID (1.7 Bar)	Capacity @ 50 PSID (3.5 Bar)
2 Micron	942654	22 grams	45.8 grams
10 Micron	942656	36.5 grams	61.6 grams

Efficiency

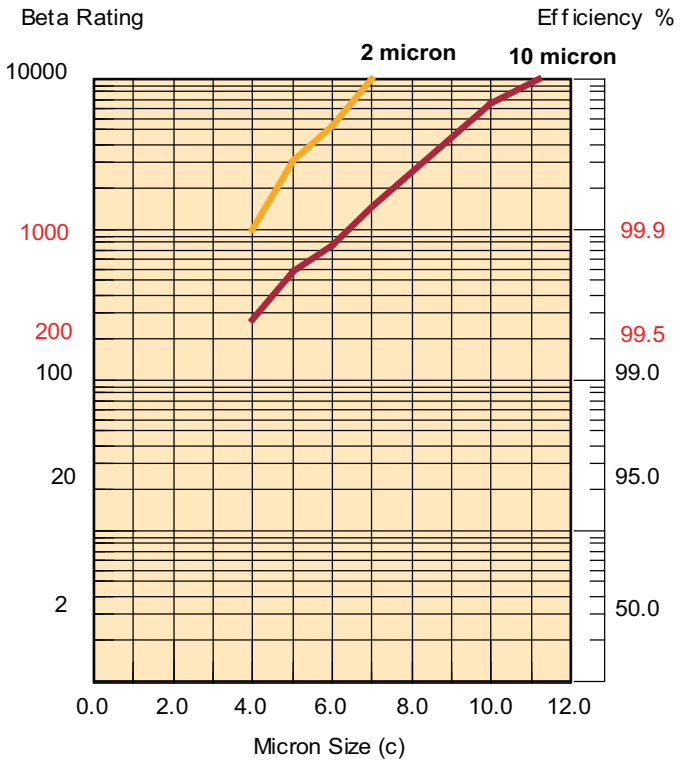

Results typical from Multi-pass tests run per modified test standard ISO 16889 to 50 psid terminal - 100 mg/L BUGL ISO Medium Test Dust was used per the standard - User results will vary based on system particle distribution.

Dirt Holding Capacity results will typically improve with soft or submicron size particles due to reduced surface caking.

OC1 without Pump/Motor

Specifications

Specifications	OC1
Maximum Pressure	180 PSI (12.4 bar)
Port Size (inlet/outlet)	SAE 6/SAE 6
Dimensions	W6.38 x D6.54 x H12.48 in. (W162 x D166 x H317 mm)
Weight	10 lbs (4.5 kg)
Flow Rate	0.4 GPM (1.5 L/min.)

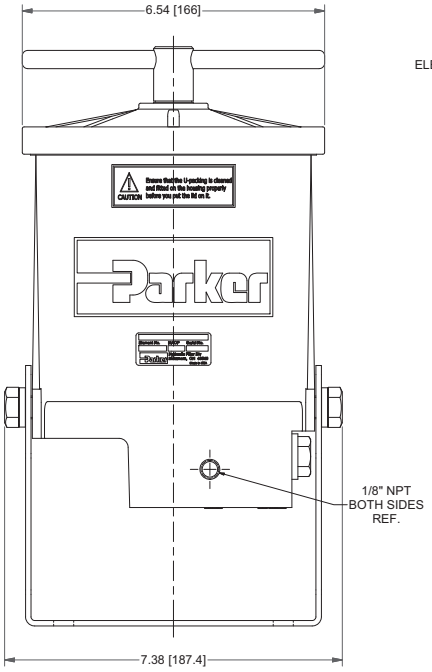

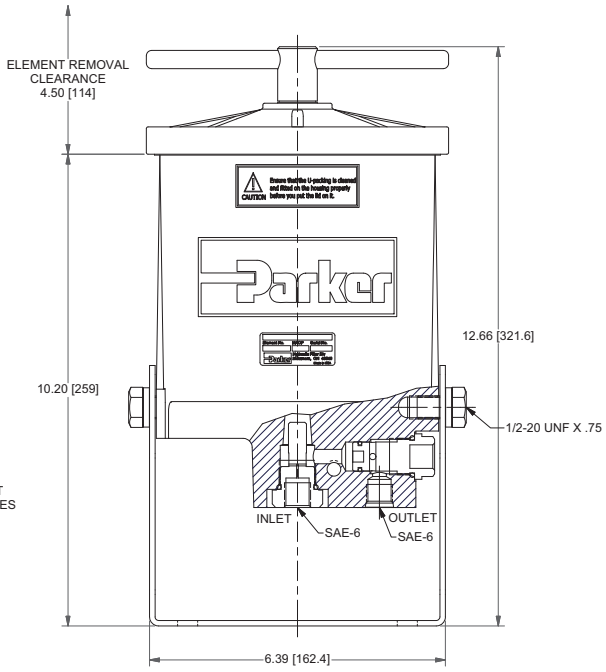

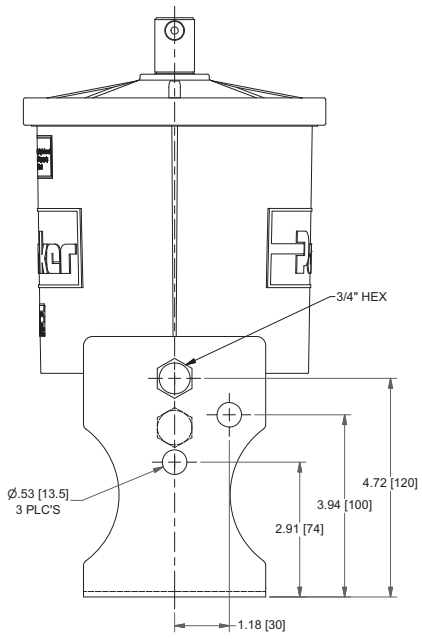

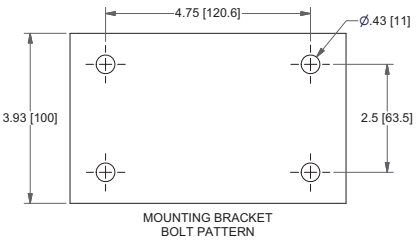

Drawings are for reference only.
Contact factory for current version.

OC2 without Pump/Motor

Specifications

Specifications	OC2
Maximum Pressure	180 PSI (12.4 bar)
Port Size (inlet/outlet)	SAE 6/SAE 8
Dimensions	W8.03 x D8.11 x H12.64 in. (W204 x D206 x H321 mm)
Weight	15 lbs (6.8 kg)
Flow Rate	0.5 GPM (2 L/min.)

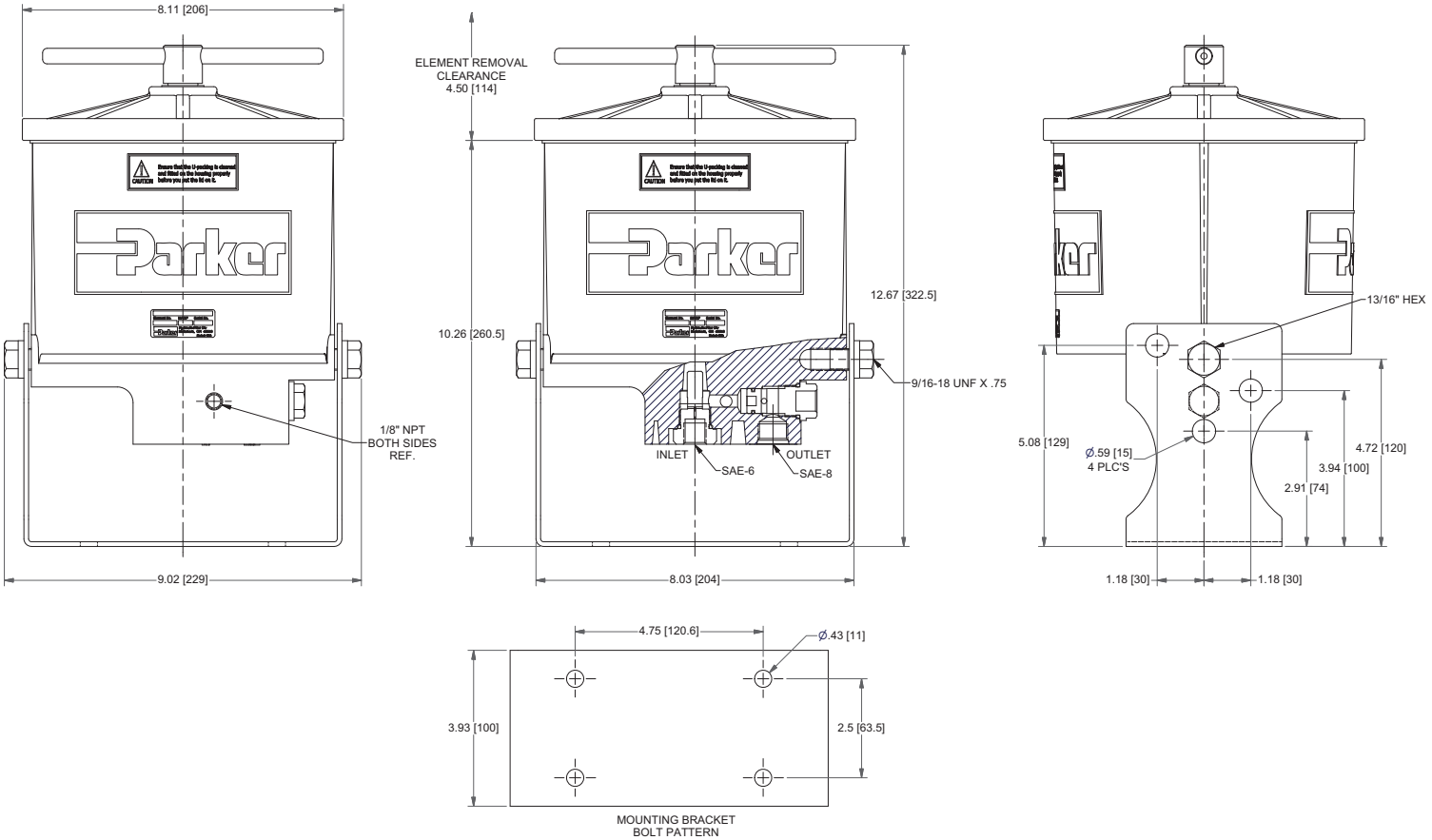

Drawings are for reference only.
Contact factory for current version.

OC2 with Pump/Motor

Specifications

Specifications	OC2
Maximum Pressure	180 PSI (12.4 bar)
Port Size (inlet/outlet)	SAE 6/SAE 6
Dimensions	W8.03 x D8.11 x H12.64 in. (W204 x D206 x H321 mm)
Weight	15 lbs (6.8 kg)
Flow Rate	0.5 GPM (2 L/min.)
Voltage	120VAC or 220VAC

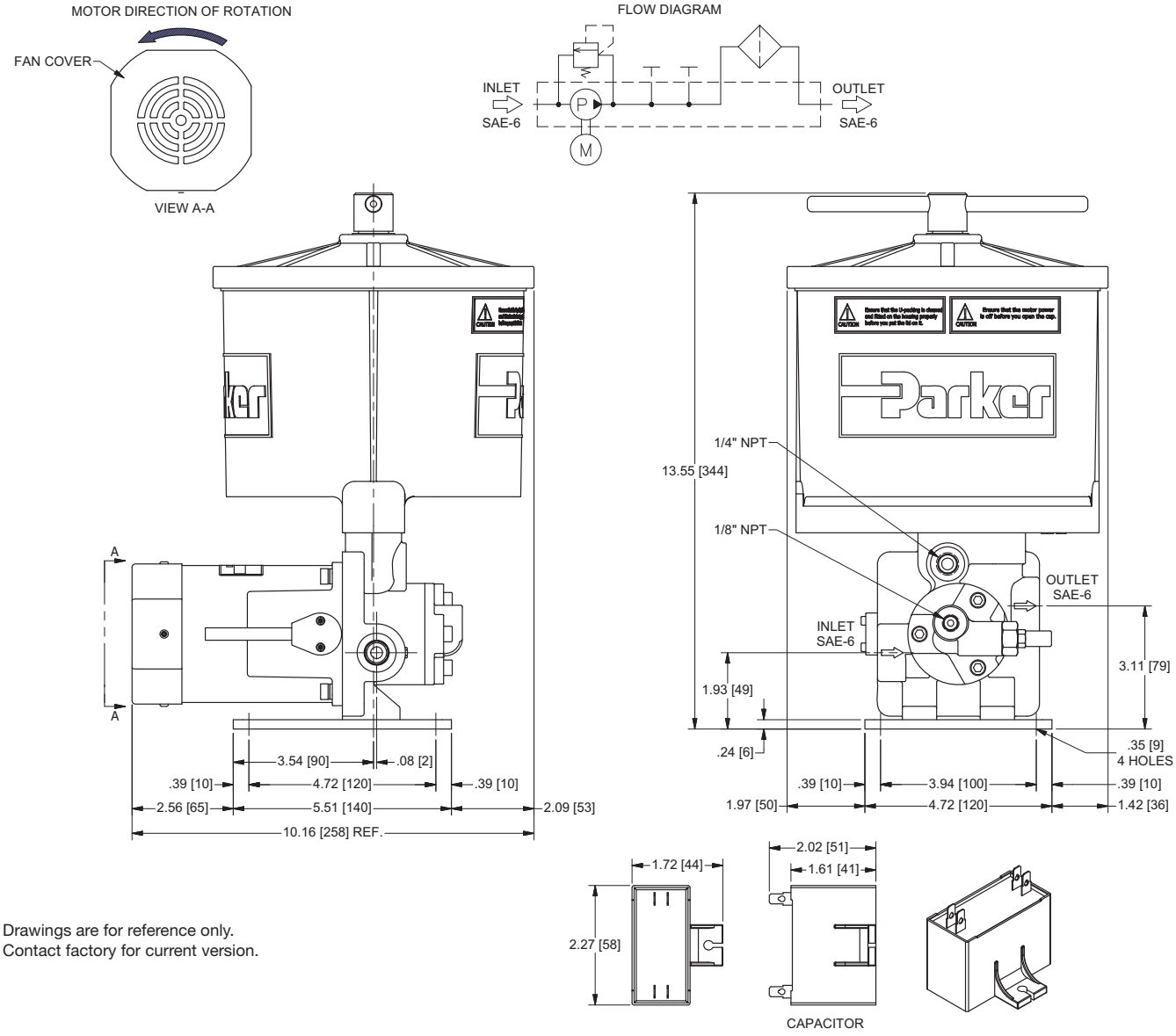

Drawings are for reference only.
Contact factory for current version.

Oil Conditioning Unit

Parts List

Replacement Parts List	
942673	Seal Service Kit (for OC1)
942683	Seal Service Kit (for OC2)

Replacement Elements	
OC1	
942650	2 micron (green)
942652	10 micron (orange)
OC2	
942654	2 micron filter (green)
942656	10 micron filter (orange)
942682	Water Removal

Oil Conditioning Unit

How to Order

Select the desired symbol (in the correct position) to construct a model code.
Example:

BOX 1	BOX 2	BOX 3	BOX 4	BOX 5	BOX 6	BOX 7	BOX 8
OC2	120	10	V	P	L	S06	1

BOX 1: Filter Series[1]

Symbol	Description
OC1	0.4 GPM (1.5 L/min.)
OC2	0.5 GPM (2.0 L/min.)[1]

BOX 2: Filter Model[1,2]

Symbol	Description
120	120VAC/1Ph/60Hz Pump/Motor[2]
220	220VAC/1Ph/50/60Hz Pump/Motor[2]
X	No Pump/Motor[1]

BOX 3: Media Code[3]

Symbol	Description
2	2 micron
10	10 micron
WR	Water Removal[3]

BOX 4: Seals

Symbol	Description
V	Fluorocarbon (FKM)

BOX 5: Indicator

Symbol	Description
P	Indicator Port Plugged
G	Pressure Gauge
S	Pressure Switch

BOX 6: Bypass

Symbol	Pressure Setting
L	65 psid (4.5 bar) relief

BOX 7: Ports[4]

Symbol	Description
S06	SAE-6 Inlet/Outlet Ports
S08	SAE-6 Inlet Port/SAE-8 Outlet Port[4]

BOX 8: Options

Symbol	Description
1	**None**

Notes:

1. When selection from Box 1 is “OC2”, and selection from Box 2 is “X”, “S08” ***must*** be selected for Box 7.
2. “120” and “220” are available ***only*** when “OC2” is selected in Box 1.
3. “WR” available for OC2 ***only***.
4. “S08” is ***only*** used when “OC2” is selected in Box 1 and “X” is selected in Box 2.